Zeal Education Society's

ZEAL POLYTECHNIC, PUNE

NARHE | PUNE -41 | INDIA

DEPARTMENT OF MECHANICAL ENGINEERING

SECOND YEAR (SY)

SCHEME: I **SEMESTER: III**

NAME OF SUBJECT: BASIC ELECTRICAL AND ELECTRONICS ENGINEERING

Subject Code: 22310

UNIT WISE MULTIPLE CHOICE QUESTIONS BANK

Question Bank for Multiple Choice Questions

Program: Diploma in Mechanical engineering	**Program Code:- ME**
Scheme:-I	**Semester:- 3**
Course:- Basic Electrical & Electronics Engineering	**Course Code:- 22310**

01 – Electric and Magnetic Circuits	**Marks:-08**
Content of Chapter:- 1.1 EMF, Current, Potential Difference, Power and Energy. 1.2 MMF, magnetic force, permeability, hysteresis loop, reluctance, leakage factor and B-H curve. 1.3 Analogy between electric and magnetic circuits. 1.4 Electromagnetic induction, faraday's laws of electromagnetic induction, Lenz's law, Dynamically induced emf. 1.5 Statically induced emf- (a) self induced emf (b) mutually induced emf, equation of self and mutually induced emf; equation of self and mutual inductance	

1. The Unit of Magnetic Flux is
(A) Tesla
(B) Weber
(C) Weber - metre
(D) None of the above
Answer: - Option B

2. EMF Stands for
(A) Electromechanical force
(B) Electromagnetic I force
(C) Electromotive force
(D) None of the above
Answer: - Option C

3. Volt is equal to
(A) Joule/Coulomb
(B) Ampere/Seconds
(C) Joule/Seconds
(D) Coulomb/Seconds
Answer: - Option A

4. B in B-H curve is known as
(A) Reluctance
(B) Magnetizing Force
(C) Magnetic flux density
(D) Magnetic Intensity
Answer: - Option C

5. The Unit of Magnetic Flux Density is
(A) Tesla
(B) Weber
(C) Weber - metre
(D) None of the above
Answer: - Option A

6. MMF stands for
(A) Magnetic Memory field
(B) Magnetic Material Force
(C) Magneto Motive Force
(D) None of the above
Answer: - Option C

7. H in B-H curve is known as
(A) Reluctance
(B) Magnetizing Force
(C) Magnetic flux density
(D) Magnetic Intensity
Answer: - Option B

8. Watt is equal to
(A) Joule/Coulomb
(B) Ampere/Seconds
(C) Joule/Seconds
(D) Coulomb/Seconds
Answer: - Option C

9. Hysteresis in magnetic circuit is phenomenon of
(A) Lagging of B behind H
(B) Lagging of H behind B
(C) Setting up constant flux
(D) None of the above
Answer: - Option A

10. The SI Unit of Actual Permeability of free space is
(A) Henry
(B) Henry/Metre
(C) Weber - metre
(D) Farad/Metre
Answer: - Option B

11. Magnetic flux passes more readily through

(A) Wood
(B) Air
(C) Iron
(D) Vacuum
Answer: - Option C

12. MMF in magnetic circuit corresponds to _____ in electric circuit

(A) Potential Difference
(B) EMF
(C) Current
(D) Resistance
Answer: - Option B

13. The B-H curve of _____ will not be a straight line

(A) Wood
(B) Air
(C) Soft Iron
(D) Copper
Answer: - Option C

14. Direction of induced EMF can be found out from

(A) Faradays law
(B) Amperes law
(C) Fleming left hand Rule
(D) Lenz´s law
Answer: - Option D

15. Which of the following material has least area of Hysteresis loop

(A) Wrought Iron
(B) Hard Steel
(C) Soft Iron
(D) Silicon Steel
Answer: - Option D

16. Ampere is equal to

(A) Joule/Coulomb
(B) Ampere/Seconds
(C) Joule/Seconds
(D) Coulomb/Seconds
Answer: - Option D

17. Flux in magnetic circuit corresponds to _____ in electric circuit

(A) Potential Difference
(B) EMF
(C) Current
(D) Resistance

Answer: - Option C

18. Reluctance in magnetic circuit corresponds to _____ in electric circuit
(A) Potential Difference
(B) EMF
(C) Current
(D) Resistance
Answer: - Option D

19. Magnitude of induced EMF is found out from
(A) Faradays law
(B) Amperes law
(C) Fleming left hand Rule
(D) Lenz´s law
Answer: - Option A

20. Direction of induced EMF can be found out from
(A) Faradays law
(B) Fleming right hand Rule
(C) Lenz´s law
(D) Both B & C
Answer: - Option D

21. If charge Q is 4 coulombs and time t is 1 seconds then current I is
(A) 1 Ampere
(B) 5 Ampere
(C) 3 Ampere
(D) 4 Ampere
Answer: - Option D
Explanation: - I = Q/t

22. If 3 joules work is done to charge a body to one coulomb Q then voltage V is
(A) 1 Volt
(B) 2 Volt
(C) 3 Volt
(D) 4 Volt
Answer: - Option C
Explanation: - V = J/Q

23. If current I is 7 amperes and time is 1 seconds then charge Q is
(A) 6 coulombs
(B) 7 coulombs
(C) 8 coulombs
(D) 1 coulombs
Answer: - Option B
Explanation: - Q = I*t

24. If charge Q is 8 coulombs and time t is 8 seconds then current I is

(A) 1 Ampere
(B) 5 Ampere
(C) 3 Ampere
(D) 4 Ampere
Answer: - Option A
Explanation: - I = Q/t

25. If current I is 2 amperes and time t is 4 seconds then charge Q is

(A) 6 coulombs
(B) 7 coulombs
(C) 8 coulombs
(D) 1 coulombs
Answer: - Option B
Explanation: - Q = I*t

26. If energy is 5 joules and time t is 1 seconds then power W is

(A) 5 Watts
(B) 4 Watts
(C) 6 Watts
(D) 1 Watt
Answer: - Option A
Explanation: - Energy = Power * time

27. If energy is 5 joules and time t is 5 seconds then power W is

(A) 5 Watts
(B) 4 Watts
(C) 6 Watts
(D) 1 Watt
Answer: - Option D
Explanation: - Energy = Power * time

28. The MMF of 75 turn coil of wire carrying 4 ampere current is

(A) 71 At
(B) 79 At
(C) 300 At
(D) 75 At
Answer: - Option C
Explanation: - MMF = Ampere-turns

29. The number of turns coil of wire carrying 2 ampere current having MMF of 100 At are

(A) 98
(B) 102
(C) 50
(D) 2
Answer: - Option C
Explanation: - MMF = Ampere-turns

30. The current through the wire having 200 number of turns and MMF of 200 At is

(A) 1 A
(B) 0 A
(C) 400 A
(D) 200 A
Answer: - Option C
Explanation: - MMF = Ampere-turns

31. The magnetic flux density in a magnetic field in which flux is 600 Microweber and area is 0.1 m^2

(A) 6000 microtesla
(B) 600 microtesla
(C) 6 tesla
(D) 0.6 tesla
Answer: - Option A
Explanation: - B= Flux/Area

32. The flux in a magnetic field in which magnetic flux density is 0.003 Tesla and area is 0.4 m^2

(A) 1.2 miliweber
(B) 1.2 weber
(C) 0.0012 miliweber
(D) 0.003 miliweber
Answer: - Option A
Explanation: - B= Flux/Area

33. When the length of the material increases reluctance

(A) Increases
(B) Decreases
(C) Remains the same
(D) Becomes Zero
Answer: - Option A

34. The area of a magnetic field in which magnetic flux density is 0.008 Tesla and flux is 1.4 miliweber

(A) 0.175 m^2
(B) 0.005 m^2
(C) 0.75 m^2
(D) 1.75 m^2
Answer: - Option A
Explanation: - B= Flux/Area

35. The MMF of 50 turn coil of wire carrying 4 ampere current is

(A) 71 At
(B) 79 At
(C) 200 At
(D) 75 At
Answer: - Option C
Explanation: - MMF = Ampere-turn

Prepared By Mr. Mali P. A.	**Verified By** . Module Coordinator	**Re-Verified By** . Academic Coordinator	**Approved By** . HoD Mech

Question Bank for Multiple Choice Questions

Program: Diploma in Mechanical engineering	**Program Code:- ME**
Scheme:-I	**Semester:- 3**
Course:- Basic Electrical & Electronics Engineering	**Course Code:- 22310**

02 – AC Circuits	**Marks:-12**
Content of Chapter:- 2.1 Cycle, Frequency, Periodic time, Amplitude Angular velocity, RMS value, Average value Form Factor, Peak Factor, impedance, phase angle and power factor. 2.2 Mathematical and phasor representation of alternating emf and current; Voltage and current relationship in star and delta connections. 2.3 A.C. in resistors, inductors and capacitors; A.C. in R-L series, R-C series, R-L-C series and parallel circuits; power in AC circuits, power triangle.	

1. The unit of frequency is
(A) Cycle
(B) Cycle-second
(C) Hertz/second
(D) Hertz
Answer: - Option D

2. The frequency of an alternating current is
(A) The speed with which the alternator runs
(B) The number of cycles generated in one minute
(C) The number of waves passing through a point in one second
(D) The number of electrons passing through a point in one second
Answer: - Option C

3. The power factor of an AC circuit is equal to
(A) Cosine of the phase angle
(B) Sine of the phase angle
(C) Unity for a capacitive circuit
(D) Unity for a inductive circuit
Answer: - Option A

4. If two sinusoids of the same frequency but of different amplitudes and phase angles are subtracted, the resultant is
(A) A sinusoid of the same frequency
(B) A sinusoid of half the original frequency

(C) A sinusoid of double the frequency
(D) Not a sinusoid
Answer: - Option A
Explanation: - sinusoidal quantities with same frequency can be added or subtracted

5. Form factor for a sine wave is
(A) 1.414.
(B) 0.707
(C) 1.11.
(D) 0.637
Answer: - Option C
Explanation: - form factor=RMS Value/Average Value=1.11

6. In an A.C. circuit power is dissipated in
(A) Resistance only
(B) Inductance only
(C) Capacitance only
(D) None of the above
Answer: - Option A
Explanation: - Resistance in a circuit that has a voltage drops across it and dissipates power

7. The voltage of domestic supply is 220 V. This value represents
(A) Mean value
(B) R.M.S value
(C) Peak value
(D) Average value
Answer: - Option B

8. The power consumed in a circuit element will be least when the phase difference between the current and voltage is
(A) 180°
(B) 90°
(C) 60°
(D) 0°
Answer: - Option B

9. Form Factor is the ratio of
(A) Average value / R.M.S value
(B) Average value/peak value
(C) R.M.S value/average value
(D) R.M.S value/peak value
Answer: - Option C
Explanation: -form factor=RMS Value/Average Value=1.11

10. The power consumed by 230 volt, 10 ampere and 0.8 power factor circuit is
(A) 2300 Watt
(B) 1840 Watt
(C) 230 Watt
(D) 1000 Watt
Answer: - Option A

Explanation: - P = V*I* Power factor

11. Power factor of the following pure circuit will be zero
(A) Resistance
(B) Inductance
(C) Capacitance
(D) Both (B) and (C)
Answer: - Option D

12. The voltage of 2800 Watt, 20 ampere and 0.7 power factor circuit is
(A) 200 Volts
(B) 400 Volts
(C) 600 Volts
(D) 800 Volts
Answer: - Option A
Explanation: - P = V*I* Power factor

13. The square waveform of current has following relation between R.M.S value and average value
(A) R.M.S value is equal to average value
(B) R.M.S value of current is greater than average value
(C) R.M.S. value of current is less than average value
(D) None of the above
Answer: - Option A

14. The power factor of 230 volt, 5 ampere and 575 watts circuit is
(A) 0.5
(B) 0.8
(C) 0.2
(D) Unity
Answer: - Option A
Explanation: - P = V*I* Power factor

15. The current of 1000 Watt, 200 volt and unity power factor circuit is
(A) 5 Amperes
(B) 50 Amperes
(C) 15 Amperes
(D) 55 Amperes
Answer: - Option A
Explanation: - P = V*I* Power factor

16. Impedance for Pure Resistive circuit is …..
(A) $Z=X_L$
(B) $Z=X_C$
(C) Z=0
(D) Z=R
Answer: - Option D

17. Impedance for Pure Inductive circuit is …..
(A) $Z=X_L$
(B) $Z=X_C$

(C) Z=0
(D) Z=R
Answer: - Option A

18. Impedance for Pure Capacitive circuit is …..
(A) $Z=X_L$
(B) $Z=X_C$
(C) Z=0
(D) Z=R
Answer: - Option B

19. Formula & Unit of Active Power is
(A) S=V*I, VA
(B) Q=V*I*SinΦ, VAR
(C) P=V*I*CosΦ, Watt
(D) None
Answer: - Option C

20. Formula & Unit of Reactive Power is
(A) S=V*I, VA
(B) Q=V*I*SinΦ, VAR
(C) P=V*I*CosΦ, Watt
(D) None
Answer: - Option B

21. Formula & Unit of apparent Power is
(A) S=V*I, VA
(B) Q=V*I*SinΦ, VAR
(C) P=V*I*CosΦ, Watt
(D) None
Answer: - Option A

22. An A.C. voltage is impressed across a pure resistance of 3.5 ohms in parallel with a pure inductance of impedance of 3.5 ohms,
(A) The current through the resistance is more
(B) The current through the resistance is less
(C) Both resistance and inductance carry equal currents
(D) None of the above
Answer: - Option C

23. **Power factor for R-L Parallel circuit is**
(A) Leading
(B) Unity
(C) Lagging
(D) None of above
Answer: - Option C

24. **Power factor of electric bulb is**
(A) Leading
(B) Unity

(C) Lagging
(D) None of above
Answer: - Option B

25. If a sinusoidal wave has frequency of 50 Hz with 30 A r.m.s. current which of the following equation represents this wave?

(A) 42.42 sin 314 t (B) 60 sin 25 t
(C) 30 sin 50 t (D) 84.84 sin 25 t

Answer: - Option A

Explanation: -Peak value=RMS Value/$\sqrt{2}$=42.42

26. Power factor of the system is kept high

(A) To reduce line losses
(B) To maximize the utilization of the capacities of generators, lines and transformers
(C) To reduce voltage regulation of the line
(D) Due to all above reasons

Answer: - Option D

27. At _____ frequencies the parallel R-L circuit behaves as purely resistive.

(A) Low (B) Very low
(C) High (D) Very high

Answer: - Option D

28. In parallel circuit power loss is due to…….

(A) Conductance alone (B) Susceptance alone
(C) Both A& B (D) none of above

Answer: - Option A

29. Domestic appliances connected in parallel because

(A) Acquire less space (B) Voltage across each will be rated
(C) Operation of each become independent (D) B & C

Answer: - Option D

30. An A.C. voltage is impressed across a pure resistance of 3.5 ohms in parallel with a pure capacitor of impedance of 3.5 ohms,

(A) The current through the resistance is more (B) The current through the resistance is less
(C) Both resistance and inductance carry equal currents (D) None of the above

Answer: - Option C

31. Power factor for R-C Parallel circuit is

(A) Leading (B) unity
(C) Lagging (D) None of above

Answer: - Option A

32. Power factor of Capacitor is

(A) Zero (B) Lagging
(C) Leading (D) Unity

Answer: - Option C

33. At _____ frequencies the parallel R-C circuit behaves as purely resistive.

(A) Low (B) Very low
(C) High (D) Very high

Answer: - Option D

34. In a parallel R-C circuit, the current always _____the applied voltage

(A) Lags (B) Leads
(C) Remains in phase with (D) None of the above

Answer: - Option B

35. At very low frequencies a series R-C circuit behaves as almost purely

(A) Resistive (B) Inductive
(C) Capacitive (D) None of the above

Answer: - Option C

36. In a parallel circuit, we consider _____ instead of impedance.

(A) Resistance (B) Capacitance
(C) Inductance (D) Admittance

Answer: -D

Explanation: In a parallel circuit, we consider admittance instead of impedance, where admittance is the reciprocal of impedance.

37. In a parallel circuit, we consider admittance instead of _____

(A) Resistance (B) Capacitance
(C) Inductance (D) Impedance

Answer: -D

Explanation: In a parallel circuit, we consider admittance instead of impedance, where admittance is the reciprocal of impedance.

38. Which, among the following is the correct expression for impedance?

(A) Z=Y (B) Z=1/Y
(C) Z=Y2 (D) Z=1/Y2

Answer: -B

Explanation: We know that impedance is the reciprocal of admittance, hence the correct expression for impedance is: Z=1/Y.

39. Which, among the following is the correct expression for admittance?

(A) Z=Y (B) Z=1/Y
(C) Z=Y2 (D) Z=1/Y2

Answer: -B

Explanation: We know that admittance is the reciprocal of impedance, hence the correct expression for admittance is: Y=1/Z.

40. What is the unit of admittance?

(A) Ohm (B) henry
(C) farad (D) ohm^{-1}

Answer: -D
Explanation: The unit for admittance is ohm^{-1} because the unit of impedance is ohm and admittance is the reciprocal of impedance.

41. As the impedance increases, the admittance _____
(A) Increases (B) Decreases
(C) Remains the same (D) becomes zero
Answer: -B
Explanation: As the impedance increases, the admittance decreases because admittance is equal to 1/impedance.

42. If the impedance of a system is 4 ohm, calculate its admittance.
(A) 0.25 ohm^{-1} (B) 4 ohm^{-1}
(C) 25 ohm^{-1} (D) 0.4 ohm^{-1}
Answer: -A
Explanation: We know that: Y=1/Z.
Substituting the value of Z from the question, we get Y = 1/4 = 0.25 => Y= 0.25 ohm^{-1}.

43. The admittance of a system is 10 ohm-1, calculate its impedance.
(A) 10 ohm (B) 0.1 ohm
(C) 1 ohm (D) 1.1 ohm
Answer: -B
Explanation: We know that: Z=1/Y.
Z = 1/10 = 0.1 => Z = 0.1 ohm.

44. In A parallel circuit, with any number of impedances, the voltage across each impedance is
(A) Equal (B) Divided equally
(C) Divided proportionally (D) zero
Answer: -A
Explanation: In parallel circuits, the current across the circuits vary whereas the voltage remains the same. So, voltage across each impedance is equal in parallel circuit

45. In a parallel circuit, current in each impedance is_____
(A) equal (B) different
(C) zero (D) infinite
Answer: -B
Explanation: In parallel circuits, the current across the circuits vary whereas the voltage remains the same. So, current in each impedance is different

46. In an impedance parallel network, the reactive component will _____ the voltage by 90 **degrees.**
a) Lead b) Lag
c) Either lead or lag d) Depends on the circuit
Answer: C
Explanation: In an impedance parallel network the reactive component will either lead or lag the voltage by 90 degrees.

47. In an impedance parallel network, the reactive component will either lead or lag the voltage by _____ degrees.
a) 0 b) 90

c) 45 d) 180

Answer: C

48. In an impedance parallel network, the reactive component will either lead or lag the _____ by 90 degrees.

a) Voltage b) Current

c) Either voltage or current d) Cannot be determined

Answer: A

Explanation: In an impedance parallel network the reactive component will either lead or lag the voltage by 90 degrees.

49. The reactive component in an impedance parallel circuit leads the voltage when the current _____ the voltage.

a) Leads b) Lags

c) Either leads or lags d) Cannot be determined

Answer: A

Explanation: The reactive component in an impedance parallel circuit leads the voltage when the current leads the voltage.

50. The active component in an impedance parallel circuit will _____ the voltage.

a) Leads b) Lags

c) Be in phase with d) Either leads or lags

Answer: C

Explanation: The active component in an impedance parallel network will always be in phase with the voltage in the circuit.

51. The phase difference between the active component of an impedance parallel circuit and the voltage in the network is _____

a) 0 b) 90

c) 180 d) 360

Answer: A

Explanation: The active component in an impedance parallel network will always be in phase with the voltage in the circuit. Hence the phase difference is 0.

52. The quadrature component is also known as?

a) Active component b) Reactive component

c) Either active or reactive component d) Neither active nor reactive component

Answer: B

Explanation: The quadrature component is also known as the reactive component because the reactive component forms a quadrature with the voltage.

53. Unit of inductive or capacitive Reactance is…….

(A) Ohm (B) Hertz

(C) Siemens (D) Second

Answer: - Option A

54. Unit of Impedance is…….

(A) Ohm (B) Hertz

(C) Siemens (D) Second

Answer: - Option A

55. Magnitude of current at resonance in R-L-C circuit

(A) Depends upon the magnitude of R
(B) Depends upon the magnitude of L
(C) Depends upon the magnitude of C
(D) Depends upon the magnitude of R, Land C

Answer: - Option A

Explanation: - Current=Voltage/impedance but for resonance only resistance is considered not impedance

56. When a sinusoidal voltage is applied across R-L series circuit having R = XL, the phase angle will be

(A) Lag by 45º
(B) Lag by 90º
(C) Lead by 0 to 90º
(D) Lead by 90º

Answer: - Option C

57. What do you know about RL circuit?

(A) An electric circuit composed of resistors and inductors in series and driven by a voltage or current source
(B) Conductor
(C) an device composed of resistors and inductors driven by a voltage or current source
(D) None of the above

Answer: - Option A

58. Following figure represents which type of AC Circuit…..

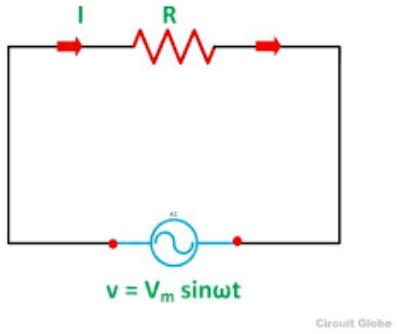

(A) Pure Resistive
(B) Pure capacitor
(C) Pure Inductive
(D) none of these

Answer: - Option A

59. Following figure represents which type of AC Circuit…..

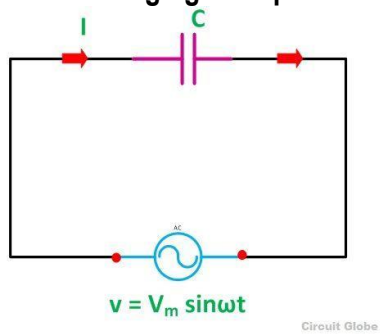

(A) Pure Resistive
(B) Pure capacitor
(C) Pure inductive
(D) none of these

Answer: - Option B

60. Following figure represents which type of AC Circuit…..

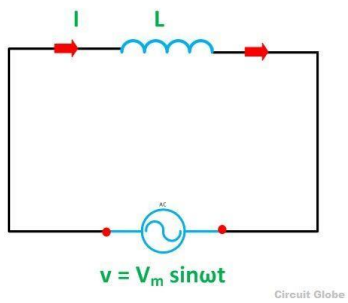

(A) Pure Resistive
(B) Pure capacitor
(C) Pure inductive
(D) none of these

Answer: - Option C

61. In following figure Phase difference is……

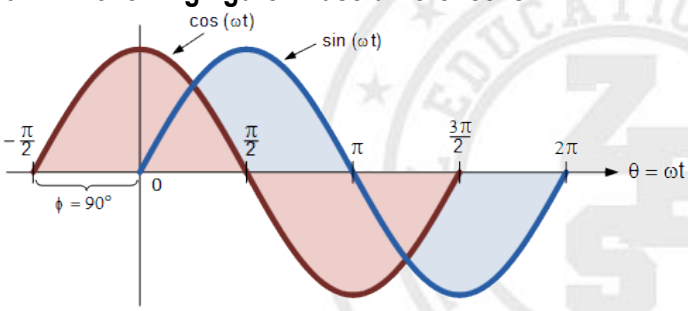

(A) 45º
(B) 90º
(C) 30º
(D) 0º

Answer: - Option B

62. In following figure ……

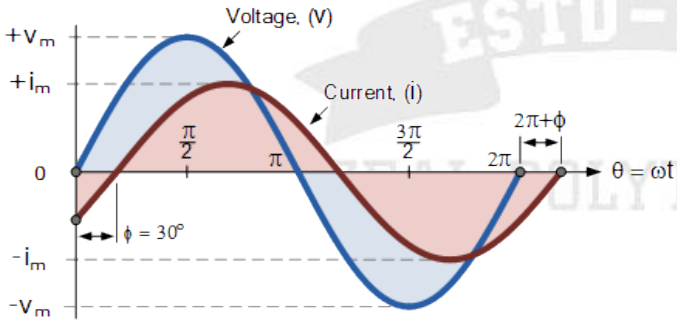

(A) Current leads voltage by 30º
(B) Current lags voltage by 30º
(C) Current leads voltage by 45º
(D) Current lags voltage by 45º

Answer: - Option B

63. In following figure ……

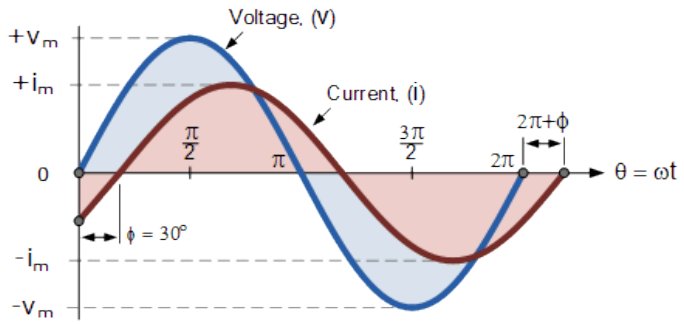

(A) Voltage leads current by 30°
(B) Voltage lags current by 30°
(C) Voltage leads current by 45°
(D) Voltage lags current by 45°

Answer: - Option A

64. In following figure .....

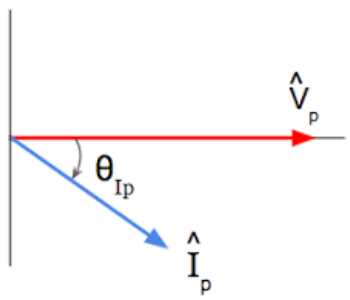

(A) Voltage lags current
(B) Voltage leads current
(C) Both are in Phase
(D) none of these

Answer: - Option B

Prepared By Mr. Mali P. A.	**Verified By** . Module Coordinator	**Re-Verified By** . Academic Coordinator	**Approved By** . HoD Mech

Question Bank for Multiple Choice Questions

Program: Diploma in Mechanical engineering	**Program Code:- ME**
Scheme:-I	**Semester:- 3**
Course:- Basic Electrical & Electronics Engineering	**Course Code:- 22310**

03 – Transformers and Single Phase Induction Motors	**Marks:-16**
Content of Chapter:- 3.1 General construction and principle of different type of transformers, EMF equation and transformation ratio of transformers. 3.2 Auto transformers. 3.3 Construction and working principle of single phase A.C. motor. 3.4 Type of single phase motors, application of single phase motors.	

1. Which of the following motor will have relatively higher power factor
(A) Capacitor start motor
(B) Shaded pole motor
(C) Capacitor run motor
(D) Split phase motor
Answer: - Option C

2. A centrifugal switch is used to disconnect 'starting winding when the motor has
(A) Picked up 10% speed
(B) Picked up 20% speed
(C) Picked up 5 – 10% speed
(D) Picked up 50 – 75% speed
Answer: - Option D

3. A shaded pole motor does not possess
(A) Commutator
(B) Centrifugal switch
(C) Capacitor
(D) All of the above
Answer: - Option D

4. The motor which is mostly preferred for compressors is
(A) Capacitor start Capacitor run motor
(B) Shaded pole motor
(C) Universal Motor
(D) Hysteresis Motor

Answer: - Option A

5. If a single-phase induction motor runs slower than normal, the most likely defect is
(A) Short circuit winding
(B) Open circuit winding
(C) Worn bearing
(D) All of the above
Answer: - Option C

6. The power factor of a single-phase induction motor is usually
(A) Always Lagging
(B) Always Leading
(C) Unity
(D) None of the above
Answer: - Option A

7. In a split-phase motor
(A) Both starting and running windings are connected through a centrifugal switch
(B) Centrifugal switch is used to control supply voltage
(C) The running winding is connected through a centrifugal switch
(D) The starting winding is connected through a centrifugal switch
Answer: - Option D

8. If the centrifugal switch does not open at 70 to 80 percent of the synchronous speed of the motor, it can
(A) Damage to the starting winding
(B) Overloading of running winding
(C) Damage to the centrifugal switch
(D) None of the above
Answer: - Option A

9. In a capacitor start a single-phase motor, when the capacitor is replaced by a resistance
(A) Motor will consume less power
(B) Motor will continue to run in the same direction
(C) Motor may get burn
(D) None of the above
Answer: - Option C

10. If the capacitor of a single-phase motor is short-circuited
(A) The motor will not start
(B) The motor will run in the same direction at a reduced speed
(C) The motor will run in the reverse direction
(D) None of the above
Answer: - Option A

11. In a ceiling fan employing capacitor run motor
(A) Primary winding surrounds the secondary winding
(B) Secondary winding surrounds the primary winding
(C) Either 1 or 2
(D) None of the above

Answer: - Option B

12. In a split-phase motor the main winding is made up of
(A) Thick wire placed at the top of the slots
(B) Thick wire placed at the bottom of the slots
(C) Thin wire placed at the top of the slots
(D) Thin wire placed at the bottom of the slots
Answer: - Option B

13. In a two-value capacitor motor, the capacitor used for running purposes is
(A) Paper spaced oil-filled type
(B) Air capacitor
(C) Ceramic type
(D) None of the above
Answer: - Option A

14. Starting winding of a single-phase motor of a refrigerator is disconnected from the circuit by means of
(A) Magnetic Relay
(B) Centrifugal switch
(C) Thermal Relay
(D) None of the above
Answer: - Option B

15. Capacitor-start single phase induction motor is switched on to supply with its capacitor replaced by an inductor of equivalent reactance value then the
(A) Motor will not start
(B) Motor will Start and run
(C) Small KW motor can start but large KW motor will not start
(D) None of the above
Answer: - Option C

16. The motor which is mostly preferred for toys is
(A) Universal Motor
(B) Repulsion Motor
(C) Series Motor
(D) Shaded Pole Motor
Answer: - Option D

17. The motor which is mostly preferred for large commercial Refrigerators is
(A) Universal Motor
(B) Hysteresis Motor
(C) Series Motor
(D) Capacitor start Motor
Answer: - Option D

18. The motor which is mostly preferred for Washing Machines is
(A) Universal Motor
(B) Repulsion Motor
(C) Series Motor

(D) Resistance start induction run motor
Answer: - Option D

19. The motor which is mostly preferred for Ceiling fans is
(A) Universal Motor
(B) Hysteresis Motor
(C) Series Motor
(D) Permanent split capacitor motor
Answer: - Option D

20. The motor which is mostly preferred for film projectors is
(A) Universal Motor
(B) Repulsion Motor
(C) Series Motor
(D) Shaded pole motor
Answer: - Option D

21. The single phase motor which is mostly preferred for Vacuum cleaners is
(A) Universal Motor
(B) Repulsion Motor
(C) A.C Series Motor
(D) Capacitor start capacitor run motor
Answer: - Option A

22. The single phase motor which is mostly preferred for Oil burners is
(A) Universal Motor
(B) Resistance start induction run motor
(C) A.C Series Motor
(D) Capacitor start capacitor run motor
Answer: - Option B

23. The single phase motor which is mostly preferred for Photo copying machines is
(A) Universal Motor
(B) Resistance start induction run motor
(C) Shaded Pole Motor
(D) Capacitor start capacitor run motor
Answer: - Option C

24. The motor which is mostly preferred for Air conditioners is
(A) Universal Motor
(B) Hysteresis Motor
(C) A.C Series Motor
(D) Capacitor start motor
Answer: - Option D

25. The motor which is mostly preferred for gramophones is
(A) Universal Motor
(B) Shaded pole motor
(C) Repulsion Motor
(D) Capacitor start motor

Answer: - Option B

26. The motor which is mostly preferred for Advertising displays is
(A) Universal Motor
(B) Capacitor run motor
(C) Shaded pole motor
(D) Capacitor start motor
Answer: - Option C

27. Which of the following motor has relatively higher starting torque
(A) Capacitor run motor
(B) Resistance start induction run motor
(C) Shaded pole motor
(D) Capacitor start motor
Answer: - Option D

28. Which of the following motor has relatively poor starting torque
(A) Capacitor start motor
(B) Capacitor run motor
(C) Shaded pole motor
(D) Resistance start induction run motor
Answer: - Option C

29. Oil level in bearings of a single phase induction motor must be checked
(A) Daily
(B) Weekly
(C) Monthly
(D) Yearly
Answer: - Option B

30. Conductor of Insulation of a single phase induction motor must be checked
(A) Daily
(B) Weekly
(C) Monthly
(D) Yearly
Answer: - Option D

31. Capacitor and centrifugal switch of a single phase induction motor must be checked
(A) Daily
(B) Weekly
(C) Monthly
(D) Half – Yearly
Answer: - Option D

32. The direction of rotation of the universal motor can be reversed by reversing the flow of current through
(A) Field winding
(B) Armature winding
(C) Either 1 or 2
(D) None of the above

Answer: - Option B

33. Starter switch and fuses of a single phase induction motor must be checked
(A) Daily
(B) Weekly
(C) Monthly
(D) Half – Yearly
Answer: - Option B

34. Oil in the sleeve bearings of a single phase induction motor must be replaced
(A) Daily
(B) Weekly
(C) Monthly
(D) Half – Yearly
Answer: - Option D

35. Air gap of a single phase induction motor must be checked
(A) Daily
(B) Weekly
(C) Monthly
(D) Yearly
Answer: - Option D

36. Loose connections of a single phase induction motor must be checked
(A) Daily
(B) Weekly
(C) Monthly
(D) Yearly
Answer: - Option B

37. If the supply frequency of a transformer increases, the secondary output voltage of the transformer
(A) Increase
(B) Decrease
(C) Remain the same
(D) Any of the above
Answer: - Option A

38. Power transformers are designed to have maximum efficiency at
(A) Full load
(B) 50% load
(C) 80% load
(D) No load
Answer: - Option A

39. Transformer core are laminated in order to
(A) Reduce hysteresis loss
(B) Reduce hysteresis & eddy current loss

(C) Minimize eddy current loss
(D) Copper loss
Answer: - Option B

40. Breather is provided in a transformer to
(A) Absorb moisture of air during breathing
(B) Provide cold air in the transformer
(C) The filter of transformer oil
(D) None of above
Answer: - Option A

41. The leakage flux in a transformer depends upon the value of
(A) Frequency
(B) Mutual Flux
(C) Load current
(D) Applied Voltage
Answer: - Option A

42. In a transformer ideally the resistance between its primary and secondary is
(A) Zero
(B) Infinite
(C) 1000 ohm
(D) 100 ohm
Answer: - Option B

43. The transformer ratings are usually expressed in terms of
(A) KW
(B) KVAR
(C) KVA
(D) Volts
Answer: - Option C

44. Which winding in a transformer has more number of turns?
(A) Secondary winding
(B) Primary winding
(C) High voltage winding
(D) Low voltage winding
Answer: - Option C

45. Oil is provided in an oil-filled transformer for
(A) Lubrication
(B) Insulation
(C) Cooling
(D) Both cooling and insulation
Answer: - Option D

45. An autotransformer can be used as
(A) Step up device

(B) Step down device
(C) Both step up and step down
(D) None of the above
Answer: - Option C

46. In an Auto Transformer, The Primary and Secondary are_____ Coupled
(A) Electrically only
(B) Magnetically only
(C) Both electrically & magnetically
(D) None of the above
Answer: - Option C

47. Which type of transformer does not isolate the secondary?
(A) Potential transformer
(B) Autotransformer
(C) Distribution transformer
(D) Current transformer
Answer: - Option B

48. Which of the following are applications of Auto-transformer?
(A) Used as switch
(B) Used as Variac
(C) Used for voltage correction
(D) All of the above
Answer: - Option D

49. Which of the following is the major disadvantage of Autotransformer?
(A) No primary and secondary wire isolation
(B) Insulation failure of primary winding may damage the whole autotransformer
(C) Individual earthing of winding is not possible
(D) All of the above
Answer: - Option D

50. The size of the transformer core mainly depends on
(A) Frequency
(B) Area of core
(C) Flux density of core
(D) Both frequency and area of core
Answer: - Option D

Prepared By Mr. Mali P. A.	**Verified By** . Module Coordinator	**Re-Verified By** . Academic Coordinator	**Approved By** . HoD Mech

Zeal Education Society's

ZEAL POLYTECHNIC, PUNE

NARHE | PUNE -41 | INDIA

DEPARTMENT OF ELECTRONICS AND TELECOMMUNICATION ENGINEERING

SECOND YEAR (SY)

SCHEME: I **SEMESTER: III**

NAME OF SUBJECT: Basic Electrical & Electronics Engineering

Subject Code: 22310

UNIT WISE MULTIPLE CHOICE QUESTIONS BANK

Question Bank for Multiple Choice Questions

Program: Diploma in Electronics & Telecommunication engineering	**Program Code:- EJ**
Scheme:-I	**Semester:- 3**
Course:- Basic Electrical & Electronics Engineering	**Course Code:- 22310**

04 – Electronics Components & Signals	**Marks:-12**

Content of Chapter:-
1. Active & Passive components: resistor, capacitor, inductor: symbol, colour code & specifications
2. Voltage & current sources
3. Signals: waveform, time & frequency domain representation, amplitude, frequency, phase, wavelength
4. Integrated circuits: analog & digital

1. Which of the following component is an active component?
a) Resistor
b) Capacitor
c) Inductor
d) Diode
Answer: d
Explanation: as diode operates on DC power supply, so it is a type of active component

2. Which of the following component is a passive component?
a) Resistor
b) Integrated circuit
c) Transistor
d) Diode
Answer: a
Explanation: as resistor does not amplify & operate on DC power supply, so it is a type of passive component

3. The components that can amplify (increase the power of a weak signal) or process the electrical signal is called as _____.
a) Passive components
b) Active components
c) Both A and B
d) None of the above
Answer: b
Explanation: as active components operates on DC power supply & can amplify signal, so it is a type of active component
4. The components that can't amplify (increase the power of a weak signal) or process the electrical signal is called as _____.
a) Passive components
b) Active components
c) Both A and B

d) None of the above
Answer: a
Explanation: as passive components does operates on DC power supply & cant amplify signals, so it is a type of active component

5. Active components can carry current in _____ direction.
a) One
b) Both direction (bidirectional)
c) Both A and B
d) None of the above
Answer: a
Explanation: active components carry current in only one direction

6. Passive components can carry current in _____ direction.
a) One
b) Both direction (bidirectional)
c) Do not carry current
d) None of the above
Answer: b
Explanation: passive components carry current in only two direction

7. Active components _____ power supply for their working.
a) generate
b) Do not require
c) Require
d) None of the above
Answer: c
Explanation: active components require power supply to operate

8. Passive components _____ power supply for their working.
a) generate
b) Do not require
c) Require
d) None of the above
Answer: b
Explanation: passive components do not require power supply for its operation

9. Applications of active components are _____
a) Amplifier
b) Rectifier
c) Regulator
d) All of the above
Answer: d
Explanation: active components are used in amplifiers, rectifiers & regulators

10. Application of passive components is _____
a) Amplifier
b) Rectifier
c) Regulator
d) all of the above

Answer: d
Explanation: passive components are used in amplifiers, rectifiers & regulators

11. Unit of resistance is _____
a) Henry
b) Farad
c) Volt
d) Ohm
Answer: d
Explanation: ohm is the unit of resistance

12. Unit of capacitance is _____
a) Henry
b) Farad
c) Volt
d) Ohm
Answer: b
Explanation: farad is the unit of capacitance

13. Unit of inductance is _____
a) Henry
b) Farad
c) Volt
d) Ohm
Answer: a
Explanation: henry is the unit of inductance

14. The property of resistance is to _____.
a) Oppose change in current
b) Oppose change in voltage
c) Oppose current
d) Store charge in the form of static energy.
Answer: c
Explanation: resistance opposes current

15. The property of capacitance is to _____.
a) Oppose change in current
b) Oppose change in voltage
c) Oppose current
d) Generate magnetic field.
Answer: b
Explanation: capacitance opposes change in voltage

16. The property of inductance is to _____.
a) Oppose change in current
b) Oppose change in voltage
c) Oppose current
d) Store charge in the form of static energy.
Answer: a
Explanation: inductance opposes change in current

17. If the value of the applied voltage to a resistor exceeds (rises) above the maximum voltage rating, then the resistor will be _____.
a) Working as a conductor
b) Working as an insulator
c) Working as a semiconductor
d) Damaged permanently
Answer: d
Explanation: as voltage exceeds above maximum voltage rating, then resistor can damage

18. It is the maximum allowable value of the voltage that could be applied across the resistor is ____
a) Maximum voltage rating
b) Maximum power rating
c) Peak inverse voltage
d) Knee voltage
Answer: a
Explanation: maximum voltage rating is maximum allowable voltage that can be applied across resistor

19.The smaller value of temperature coefficient will have _____ variation in the resistance value (higher stability).
a) Less
b) More
c) No
d) None of the above
Answer: a
Explanation: smaller value of temperature coefficient will have less variation in the resistance value (higher stability)

20. The _____ rating of a resistor is given by the maximum wattage it can dissipate without excessive heat.
a) Maximum voltage rating
b) Maximum power rating
c) Peak inverse voltage
d) Knee voltage
Answer: b
Explanation: maximum power rating of a resistor is given by the maximum wattage it can dissipate without excessive heat

21. By _____ is meant the possible variation from the marked resistance value of a resistor.
a)Maximum voltage rating
b)Maximum power rating
c)Tolerance
d)Knee voltage
Answer: c
Explanation: By tolerance is meant the possible variation from the marked resistance value of a resistor.

22. A 4.7 KΩ resistor with a tolerance of 10% will have an actual resistance anywhere in between _____
a)4000 Ω to 5000 Ω.
b)4070 Ω to 5070 Ω
c)4230 Ω to 5170 Ω
d)4700 Ω to 5700 Ω
Answer: c
Explanation: A 4.7 KΩ resistor with a tolerance of 10% will have an actual resistance anywhere in between

4230ohm to 5170ohm

23. Calculate the value of following resistor using four band colour coding method
Red, Red, Orange, Gold
a)2200 Ω + 5%
b)22 KΩ + 5%
c)220 KΩ +5%
d)2.2 KΩ + 5%
Answer: b
Explanation: 22kohm+5%.

24. Calculate the value of following resistor using four band colour coding method
Brown, Black, Orange, Gold
a)100 Ω + 5%
b)10 KΩ + 5%
c)100 KΩ +5%
d)1.0 KΩ + 5%
Answer: b
Explanation: 10Kohm+5%.

25. Determine colours band for the 1 Kohm resistor using four band colour coding method
a)Brown, Black, Orange, Gold
b)Brown, Black, Red, Gold
c)Brown, Black, Yellow, Gold
d)Brown, Black, Brown, Gold
Answer: b
Explanation:

26. Determine colours band for the 4.7 Kohm resistor using four band colour coding method
a)Yellow, Blue, Red, Gold
b)Orange, Blue, Red, Gold
c)Yellow, Violet, Red, Gold
d)Yellow, Blue, Orange, Gold
Answer: c
Explanation:

27. The capacitance value depends upon _____
a)Area of capacitor
b)Distance between two plates of capacitor
c)Permittivity of the dielectric material
d)All of the above
Answer: d
Explanation: The capacitance value depends upon Area of capacitor,Distance between two plates of capacitor,Permittivity of the dielectric material

28. The capacitance value is inversely proportional to _____
a)Area of capacitor
b)Distance between two plates of capacitor
c)Permittivity of the dielectric material
d)All of the above
Answer: b

Explanation: The capacitance value is inversely proportional to Distance between two plates of capacitor.

29. The capacitance value is directly proportional to _____
a)Area of capacitor
b)Permittivity of the dielectric material
c)Distance between two plates of capacitor
d)Both A and B
Answer: d
Explanation: The capacitance value is directly proportional to Area of capacitor
,Permittivity of the dielectric material.

30. Capacitive reactance is to _____
a)Oppose change in current
b)Oppose change in voltage
c)Opposes current
d)Store charge in the form of static energy.
Answer: b
Explanation: Capacitive reactance is to Oppose change in current

31. The inductance value depends upon _____
a)The number of turns of wire in inductor
b)The material of core
c)The shape & size of core
d)All of the above
Answer: d
Explanation: The inductance value depends upon,the number of turns of wire in inductor,the material of core,the shape & size of core

32. Which of the following is not a dielectric material
a)Mica
b)Ceramic
c)Copper
d)Glass
Answer: c
Explanation:copper

33. Calculate the value of following capacitor using colour coding method
Yellow, Violet, Yellow
a)0.47 Farad
b)0.47 nF
c)0.047 μF
d)0.47 μF
Answer: b
Explanation:

34. Resistor can be used for _____
a)rectification
b)Amplification
c)Limiting the current
d)All of the above
Answer: d

Explanation:

35. Capacitor can be used for _____
a)rectification
b)Amplification
c)Limiting the current
d)Filtering (removing unwanted AC from pulsating DC)
Answer: d
Explanation: Capacitor can be used for Filtering (removing unwanted AC from pulsating DC)

36. Inductor can be used for _____
a)rectification
b)Amplification
c)Limiting the current
d)Filtering (removing unwanted AC from pulsating DC)
Answer: d
Explanation: Inductor can be used for Filtering (removing unwanted AC from pulsating DC)

37. Inductive reactance is to _____
a)Oppose change in current
b)Oppose change in voltage
c)Opposes current
d)Store charge in the form of static energy.
Answer: a
Explanation: Inductive reactance is to Oppose change in current

38. Based on the iron core materials used, inductors can be called as _____
a)Air core inductor
b)Iron core inductor
c)Ferrite core inductor
d)None of the above
Answer: c
Explanation: Based on the iron core materials used, inductors can be called as Ferrite core inductor

39. Based on the ferrite core materials used, inductors can be called as _____
a)Air core inductor
b)Iron core inductor
c)Ferrite core inductor
d)None of the above
Answer: c
Explanation: Based on the ferrite core materials used, inductors can be called as Ferrite core inductor

40 Based on the hollow (cardboard) core materials used, inductors can be called as _____
a)Air core inductor
b)Iron core inductor
c)Ferrite core inductor
d)None of the above
Answer: a
Explanation: Based on the hollow (cardboard) core materials used, inductors can be called as Air core inductor

41. Calculate the value of following Inductor using colour coding method

Red, Orange, Brown, Gold
a)230 H+ 5%
b)23 μH+5%
c)230 μH+5%
d)230 μH+20%
Answer: c
Explanation:

42. Electrical sources are capable of _____
a)Converting nonelectric energy into electric energy
b)Converting electric energy into nonelectric energy
c)Both A and B
d)None of the above
Answer: a
Explanation:

43. Ideal voltage source maintains constant voltage across its terminals _____
a)With respect to current drawn from source
b)Irrespective to current drawn from source
c)Depending on the load connected to it.
d)None of the above
Answer: b
Explanation: Ideal voltage source maintains constant voltage across its terminals irrespective to current drawn from source

44. Practical voltage source cannot maintain constant voltage across its terminals _____
a)Due to zero internal resistance existing
b)Due to finite non-zero internal resistance existing
c)Due to infinite internal resistance existing
d)None of the above
Answer: b
Explanation: Practical voltage source cannot maintain constant voltage across its terminals due to finite non-zero internal resistance existing

45. Ideal Current source maintains constant current _____
a)With respect to voltage across it
b)Independent to voltage across it
c)Both A & B
d)None of the above
Answer: b
Explanation: Ideal Current source maintains constant current independent to voltage across it

46. Practical current source cannot maintain constant current _____
a)Due to zero internal resistance existing in parallel
b)Due to finite non-zero internal resistance existing in parallel
c)Due to infinite internal resistance existing in parallel
d)None of the above
Answer: b
Explanation: Practical current source cannot maintain constant current due to finite non-zero internal resistance existing in parallel

47. The maximum or peak value of AC is called as _____
a)Phase
b)Frequency
c)Amplitude
d)Wavelength
Answer: c
Explanation: The maximum or peak value of AC is called as amplitude.

48. The number of cycles completed in one second is called as _____
a)Phase
b)Frequency
c)Amplitude
d)Wavelength
Answer: b
Explanation: The number of cycles completed in one second is called as Frequency.

49. _____ represents the position of the waveform with respect to time zero
a)Phase
b)Frequency
c)Amplitude
d)Wavelength
Answer: a
Explanation:Phase represents the position of the waveform with respect to time zero

50. _____ is the distance travelled by a signal during the time period of one cycle.
a)Phase
b)Frequency
c)Amplitude
d)Wavelength
Answer: d
Explanation: Wavelength is the distance travelled by a signal during the time period of one cycle.

51 What is the peak-to-peak amplitude of the following given signal?

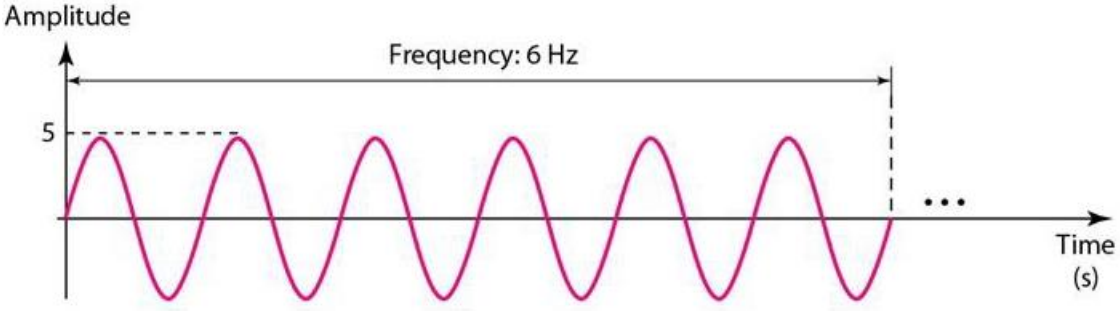

a)10Vpp
b)2.5Vpp
c)5Vpp
d)2.5V
Answer: a
Explanation:

52. What is the peak amplitude of the following given signal?

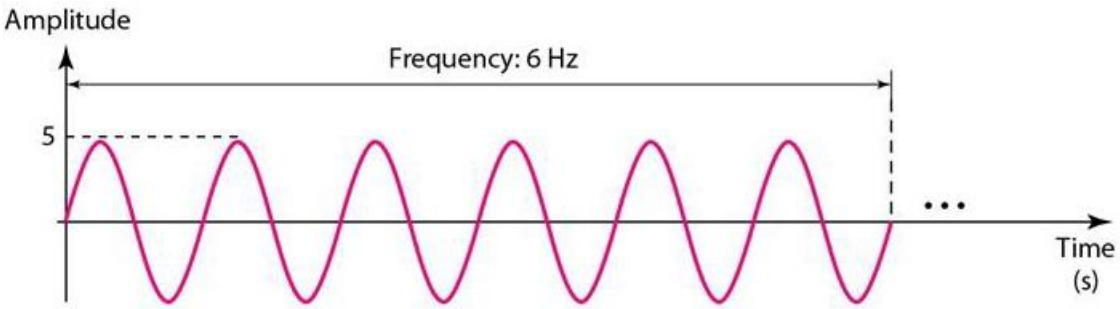

a)10Vp
b)2.5Vpp
c)5Vp
d)2.5V
Answer: c
Explanation:

53. What is the frequency of the following given signal?

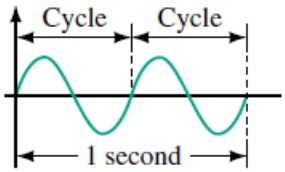

a)20 Hertz
b)1 Hertz
c)2 Hertz
d)12 Hertz
Answer: b
Explanation:

54. What is the frequency of the following given frequency domain signal?

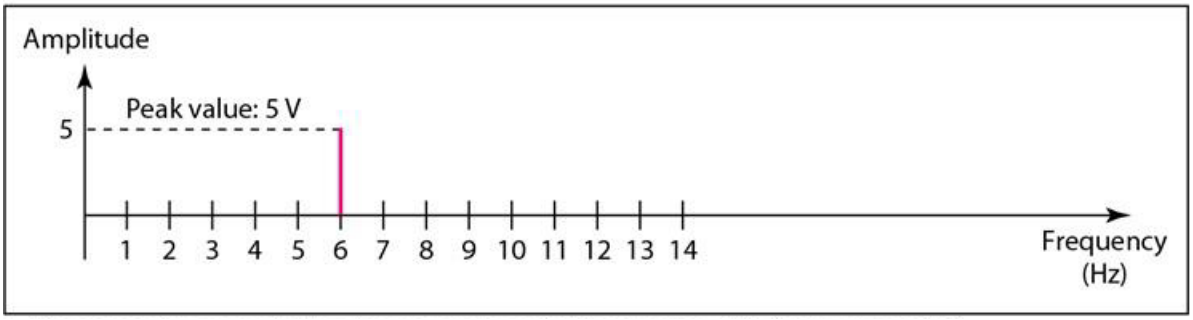

a)20 Hertz
b)1 Hertz
c)2 Hertz
d)6 Hertz
Answer: d
Explanation:

55. _____ ICs are the most commonly used
a)Thin films
b)Monolithic
c)Hybrid

c)None of the above
Answer: b
Explanation: Monolithic ICs are the most commonly used

56. A transistor takes _____ inductor on a silicon IC chip
a)Less space than
b)More space than
c)Same space as
d)None of the above
Answer: b
Explanation: A transistor takes more space than inductor on a silicon IC chip

57. An audio amplifier is an example of _____
a)Digital IC
b)Linear IC
c)Both digital and linear IC
d)None of the above
Answer: b
Explanation: An audio amplifier is an example of linear IC.

58. An integrated circuit (IC) has _____ size
a)Very large
b)Large
c)Extremely small
d)None of the above
Answer: c
Explanation: An integrated circuit (IC) has small size

59. The advantages of IC are _____
a)Small in size
b)Light in weight
c)Less power consumption
d)All of the above
Answer: d
Explanation: The advantages of IC are Small in size,Light in weight,Less power consumption

60. The disadvantage of IC is _____
a)It is not possible to fabricate inductor in IC
b)ICs are very delicate
c)Power dissipation is limited
d)All of the above
Answer: b
Explanation: The disadvantage of IC is ICs are delicate.

61. Applications of IC are _____
a)TV
b)Mobile
c)Laptop
d)All of the above
Answer: d
Explanation: Applications of IC are TV,Mobile,Laptop

62. Analog IC process _____
a)Analog signals
b)Digital signals
c)Both A & B
d)None of the above
Answer: a
Explanation: Analog IC process analog signal.

63. Digital IC process _____
a)Analog signals
b)Digital signals
c)Both A & B
d)None of the above
Answer: b
Explanation: Digital IC process digital signal

64. Analog IC are _____ accurate compared with digital IC
a)Less
b)More
c)Alike
d)None of the above
Answer: a
Explanation: Analog IC are less accurate compared with digital IC

65. Analog IC consume _____ compared with digital IC
a)Less power
b)More power
c)Same power
d)None of the above

Answer: b
Explanation: Analog IC consume more power compared with digital IC

Prepared By Mr. Dolli S. P.	Verified By S. N. Navale Module Coordinator	Re-Verified By S N Navale Academic Coordinator	Approved By S.G.Tupe HOD EJ

Chapter 05-Diodes & Applications	**Marks:-12**

Content of Chapter:-

1. PN junction diode: symbol, construction, working & application.
2. Zener diode: working, symbol & voltage regulator
3. Rectifiers: Half wave, Full wave & Bridge type of rectifier, performance parameters: PIV, ripple factor, efficiency
4. Filters: circuit diagram & working of L, C & π filter.
5. Light emitting diode: symbol, construction working principle & applications

1. How many junction/s do a diode consist?
a) 0
b) 1
c) 2
d) 3
Answer: b
Explanation: Diode is a one junction semiconductor device which has one cathode and anode. The junction is of p-n type.

2. If the positive terminal of the battery is connected to the anode of the diode, then it is known as
a) Forward biased
b) Reverse biased
c) Equilibrium
d) Schottky barrier
Answer: a
Explanation: When a positive terminal is connected to the anode, the diode is forward biased which lets the flow of the current in the circuit.

3. During reverse bias, a small current develops known as
a) Forward current
b) Reverse current
c) Reverse saturation current
d) Active current
Answer: c
Explanation: When the diode is reverse biased, a small current flows between the p-n junction which is of the order of the Pico ampere. This current is known as reverse saturation current.

4. If the voltage of the potential barrier is V_0. A voltage V is applied to the input, at what moment will the barrier disappear?
a) $V< V_0$
b) $V= V_0$
c) $V> V_0$
d) $V<< V_0$

Answer: b
Explanation: When the voltage will be same that of the potential barrier, the potential barrier disappears resulting in flow of current.

5. During the reverse biased of the diode, the back resistance decrease with the increase of the temperature. Is it true or false?
a) True
b) False
Answer: a
Explanation: Due to the increase in the reverse saturation current due to the increase in the temperature, the back resistance decrease with the increasing temperature.

6. What is the maximum electric field when V_{bi}=2V , V_R=5V and width of the semiconductor is 7cm?
a) -100V/m
b) -200V/m
c) 100V/m
d) 200V/m
Answer: b
Explanation: Emax=-2(V_{bi}+V_R)/W
=-2(2+5)/ (7*10^{-2})
=-200V/m.

7. When the diode is reverse biased with a voltage of 6V and V_{bi}=0.63V. Calculate the total potential.
a) 6V
b) 6.63V
c) 5.27V
d) 0.63V
Answer: b
Explanation: Vt=V_{bi}+V_R
=0.63+6
=6V.

8. It is possible to measure the voltage across the potential barrier through a voltmeter?
a) True
b) False
Answer: b
Explanation: The contacts of the voltmeter have some resistance which will not accurately measure the voltage across the potential barrier. Thus, it is not possible to measure the voltage across the potential barrier.

9. What will be the output of the following circuit? (Assume 0.7V drop across the diode)

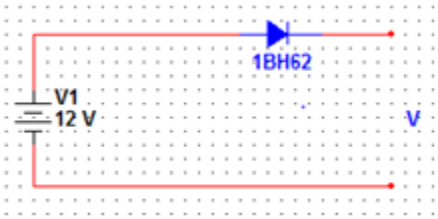

a) 12V
b) 12.7V
c) 11.3V
d) 0V
Answer: c

Explanation: V=12-0.7
=11.3V.

10. Zener diodes are also known as
a) Voltage regulators
b) Forward bias diode
c) Breakdown diode
d) None of the mentioned
Answer: c
Explanation: Zener diodes are used as voltage regulators but they aren't called voltage regulators. They are called breakdown diodes since they operate in breakdown region.

11. Which of the following is true about the resistance of a Zener diode?
a) It has an incremental resistance
b) It has dynamic resistance
c) The value of the resistance is the inverse of the slope of the i-v characteristics of the Zener diode
d) All of the mentioned
Answer: d
Explanation: All of the statements are true for the resistance of the zener diode.

12. Which of the following is true about the temperature coefficient or TC of the Zener diode?
a) For Zener voltage less than 5V, TC is negative
b) For Zener voltage around 5V, TC can be made zero
c) For higher values of Zener voltage, TC is positive
d) All of the mentioned
Answer: d
Explanation: All of the mentioned are true for the TC of a zener diode.

13. Which of the following can be used in series with a Zener diode so that combination has almost zero temperature coefficient?
a) Diode
b) Resistor
c) Transistor
d) MOSFET
Answer: a
Explanation: If a Zener diode of TC of about -2mV is connected with a forward diode (which has a TC of about +2mV) in series, the combination can be used to obtain a very low (close to zero) TC.

14. In Zener diode, for currents greater than the knee current, the v-i curve is almost
a) Almost a straight line parallel to y-axis
b) Almost a straight line parallel to x-axis
c) Equally inclined to both the axes with a positive slope
d) Equally inclined to both the axes with a negative slope
Answer: b
Explanation: Note that the curve is v-I curve and not an i-v curve.

15. Zener diodes can be effectively used in voltage regulator. However, they are these days being replaced by more efficient
a) Operational Amplifier
b) MOSFET
c) Integrated Circuits

d) None of the mentioned
Answer: c
Explanation: ICs have been widely adapted by the industries over conventional zener diodes as their better replacements for a voltage regulators.

16. A 9.1-V zener diode exhibits its nominal voltage at a test current of 28 mA. At this current the incremental resistance is specified as 5 Ω. Find VZ0 of the Zener model.
a) 8.96V
b) 9.03V
c) 9.17V
d) 9.24V
Answer: b
Explanation: $V_Z = V_{Zo} + M_Z I_{ZT}$
$9.1 = V_{Zo} + 5 * 28 * 10^{-3}$
$V_{Zo} = 8.96v$
$V_Z = V_{Zo} + 5I_Z = 8.96 * 5I_Z$.

17. A shunt regulator utilizing a zener diode with an incremental resistance of 5 Ω is fed through an 82-Ω resistor. If the raw supply changes by 1.0 V, what is the corresponding change in the regulated output voltage?
a) 72.7 mV
b) 73.7 mV
c) 74.7 mV
d) 75.7 mV
Answer: c

Small signal model for line regulation:

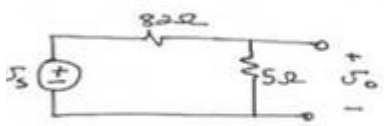

$$\frac{\Delta v_o}{\Delta v_s} = \frac{5}{5+82}$$

$$\Delta v_o = \frac{5}{87} \times \Delta v_s$$

$$= \frac{5}{87} \times 1.3$$

$$= \underline{\underline{74.7\ mV}}$$

Explanation:

18. A designer requires a shunt regulator of approximately 20 V. Two kinds of Zener diodes are available: 6.8-V devices with r_z of 10 Ω and 5.1-V devices with r_z of 30 Ω. For the two major choices possible, find the load regulation. In this calculation neglect the effect of the regulator resistance R.
a) -30mV/mA and 120mV/mA respectively
b) 30mV/mA and 60mV/mA respectively
c) -60mV/mA and +60mV/mA respectively
d) -30mV/mA and -120mV/mA respectively
Answer: d
Explanation: Three 6.8v zeners provide 3*6.8 = 20.4v with 3 * 10 =30Ω Resistance, neglecting R, we have load Regulation = -30mV/mA.
For 5.1 Zeners we need 4 diodes to provide 20.4v with 4 * 30 =120Ω Resistance.
load Regulation = -120mV/mA .

19. Partial specifications of a Zener diode is provided. V_Z = 10.0 V, V_{ZK} = 9.6 V, and I_{ZT} = 50 mA. Assuming that the power rating of a breakdown diode is established at about twice the specified Zener current (I_{ZT}), what is the power rating of each of the diodes described above?
a) 1.04 W
b) 0.104 W
c) 10.4 mW
d) 1.04 mW
Answer: a
Explanation:

$$V_z = V_{z0} + r_z I_{zT}$$
$$10 = 9.6 + r_z \times 50\times10^{-3}$$
$$r_z = \underline{\underline{8\Omega}}$$

Power rating:

$$V_z = V_{z0} + r_z \times 2I_{zT}$$
$$= 9.6 + 8\times100\times10^{-3}$$
$$= 10.4V$$

$$P = 10.4\times100\times10^{-3} = \underline{\underline{1.04W}}$$

20. The diode in a half wave rectifier has a forward resistance RF. The voltage is $V_m$sinωt and the load resistance is RL. The DC current is given by _____
a) $V_m/\sqrt{2}R_L$
b) $V_m/(R_F+R_L)\pi$
c) $2V_m/\sqrt{\pi}$
d) V_m/R_L
Answer: b
Explanation: For a half wave rectifier, the $I_{DC}=I_{AVG}=I_m/\pi$
$I= V_m\sin\omega t/(R_F+R_L)=I_m\sin\omega t$
$I_m =V_m/ R_F+R_L$ So, $I_{DC}=I_m/\pi=V_m/(R_F+R_L)$.

21. In a half wave rectifier, the sine wave input is 50sin50t. If the load resistance is of 1K, then average DC power output will be?
a) 3.99V
b) 2.5V
c) 5.97V
d) 6.77V
Answer: b
Explanation: The standard form of a sine wave is $V_m$sinωt. BY comparing the given information with this equation, V_m =50.
Power=V_m^2/R_L=50*50/1000=2.5V.

22. In a half wave rectifier, the sine wave input is 200sin300t. The average value of output voltage is?
a) 57.876V
b) 67.453V
c) 63.694V
d) 76.987V
Answer: c

Explanation: Comparing with the standard equation, V_m=200V.
Average value is given by, $V_{avg}=V_m/\pi$.
So, 200/π=63.694.

23. Efficiency of a half wave rectifier is
a) 50%
b) 60%
c) 40.6%
d) 46%
Answer: c
Explanation: Efficiency of a rectifier is the effectiveness to convert AC to DC. For half wave it's 40.6%. It's given by, V_{out}/V_{in}*100.

24. If peak voltage for a half wave rectifier circuit is 5V and diode cut in voltage is 0.7, then peak inverse voltage on diode will be?
a) 5V
b) 4.9V
c) 4.3V
d) 6.7V
Answer: c
Explanation: PIV is the maximum reverse bias voltage that can be appeared across a diode in the given circuit, If the PIV rating is less than this value of breakdown of diode will occur. For a rectifier, PIV=V_m-V_d=5-0.7=4.3V.

25. Transformer utilisation factor of a half wave rectifier is _____
a) 0.234
b) 0.279
c) 0.287
d) 0.453
Answer: c
Explanation: Transformer utilisation factor is the ratio of AC power delivered to load to the DC power rating. This factor indicates effectiveness of transformer usage by rectifier. For a half wave rectifier, it's low and equal to 0.287.

26. If the input frequency of a half wave rectifier is 100Hz, then the ripple frequency will be_____
a) 150Hz
b) 200Hz
c) 100Hz
d) 300Hz
Answer: c
Explanation: The ripple frequency of the output and input is same. This is because, one half cycle of input is passed and other half cycle is seized. So, effectively the frequency is the same.

27. Ripple factor of a half wave rectifier is_____(I_m is the peak current and RL is load resistance)
a) 1.414
b) 1.21
c) 1.4
d) 0.48
Answer: b
Explanation: The ripple factor of a rectifier is the measure of disturbances produced in the output. It's the effectiveness of a power supply filter to reduce the ripple voltage. The ratio of ripple voltage to DC output voltage is ripple factor which is 1.21.

28. Efficiency of a centre tapped full wave rectifier is _____
a) 50%
b) 46%
c) 70%
d) 81.2%
Answer: d
Explanation: Efficiency of a rectifier is the effectiveness to convert AC to DC. It's obtained by taking ratio of DC power output to maximum AC power delivered to load. It's usually expressed in percentage. For centre tapped full wave rectifier, it's 81.2%.

29. A full wave rectifier supplies a load of 1KΩ. The AC voltage applied to diodes is 220V (rms). If diode resistance is neglected, what is the ripple voltage?
a) 0.562V
b) 0.785V
c) 0.954V
d) 0.344V
Answer: c
Explanation: The ripple voltage is $(V_\Upsilon)_{RMS}=\Upsilon V_{DC}$ /100.
$V_{DC}=0.636*V_{RMS}*\sqrt{2}=0.636*220*\sqrt{2}=198V$ and ripple factor ϒ for full wave rectifier is 0.482.
Hence, $(V_\Upsilon)_{RMS}=0.482*198/100=0.954V$.

30. A full wave rectifier delivers 50W to a load of 200Ω. If the ripple factor is 2%, calculate the AC ripple across the load.
a) 2V
b) 5V
c) 4V
d) 1V
Answer: a
Explanation: We know that, $P_{DC}=V_{DC}^2/R_L$. So, $V_{DC}=(P_{DC}*RL)^{1/2}=10000^{1/2}=100V$.
Here, ϒ=0.02
$\Upsilon=V_{AC}/V_{DC}=V_{AC}/100$.So, $V_{AC}=0.02*100=2V$.

31. A full wave rectifier uses load resistor of 1500Ω. Assume the diodes have R_f=10Ω, R_r=∞. The voltage applied to diode is 30V with a frequency of 50Hz. Calculate the AC power input.
a) 368.98mW
b) 275.2mW
c) 145.76mW
d) 456.78mW
Answer: b
Explanation: The AC power input $P_{IN}=I_{RMS}^2(R_F+R_r)$.
$I_{RMS}=I_m/\sqrt{2}=V_m/(R_f+R_L)\sqrt{2}=30/(1500+10)*1.414=13.5mA$
So, P_{IN}=(13.5*10-3)2*(1500+10)=275.2mW.

32. In a centre tapped full wave rectifier, R_L=1KΩ and for diode Rf=10Ω. The primary voltage is 800sinωt with transformer turns ratio=2. The ripple factor will be _____

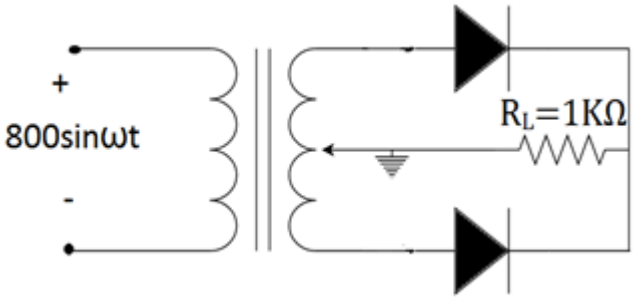

a) 54%
b) 48%
c) 26%
d) 81%
Answer: b
Explanation: The ripple factor $\Upsilon = [(I_{RMS}/I_{AVG})^2 - 1]^{1/2}$. $I_{RMS} = I_m/\sqrt{2} = V_m/(R_f+R_L)\sqrt{2} = 200/1.01 = 198$.
(Secondary line to line voltage is 800/2=400. Due to centre tap V_m=400/2=200)
I_{RMS}=198/√2=140mA, I_{AVG}=2*198/π=126mA. $\Upsilon=[(140/126)^2-1]^{1/2}$=0.48. So, ϒ=48%.

33. If input frequency is 50Hz for a full wave rectifier, the ripple frequency of it would be _____
a) 100Hz
b) 50Hz
c) 25Hz
d) 500Hz
Answer: a
Explanation: In the output of the centre tapped rectifier, one of the half cycle is repeated. The frequency will be twice as that of input frequency. So, it's 100Hz.

34. Transformer utilization factor of a centre tapped full wave rectifier is_____
a) 0.623
b) 0.678
c) 0.693
d) 0.625
Answer: c
Explanation: Transformer utilisation factor is the ratio of AC power delivered to load to the DC power rating. This factor indicates effectiveness of transformer usage by rectifier. For a half wave rectifier, it's low and equal to 0.693.

35. In the circuits given below, the correct full wave rectifier is _____

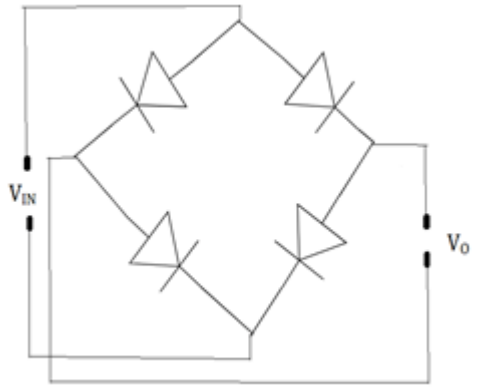

a)

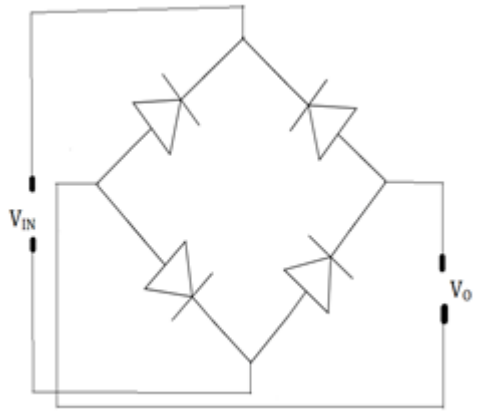

b)

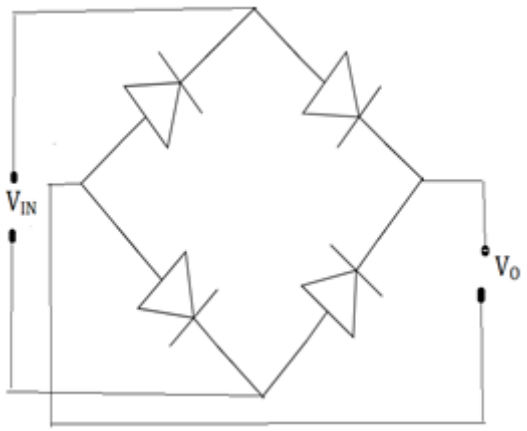

c)

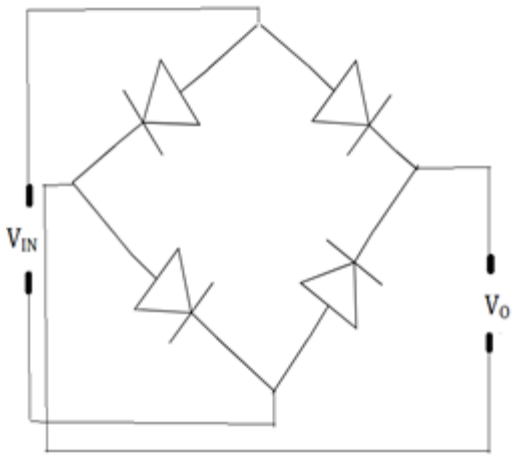

d)

Answer: c

Explanation: When the input is applied, a full wave rectifier should have a current flow. The flow should be in the same direction for both positive and negative half cycles. Only the third circuit satisfies the above condition.

36. If the peak voltage on a centre tapped full wave rectifier circuit is 5V and diode cut in voltage is 0.7. The peak inverse voltage on diode is_____

a) 4.3V

b) 9.3V

c) 5.7V

d) 10.7V

Answer: b

Explanation: PIV is the maximum reverse bias voltage that can be appeared across a diode in the given circuit,

if PIV rating is less than this value of breakdown of diode will occur. For a rectifier, PIV=$2V_m$-V_d = 10-0.7 = 9.3V.

37. In a centre tapped full wave rectifier, the input sine wave is 250sin100t. The output ripple frequency will be _____
a) 50Hz
b) 100Hz
c) 25Hz
d) 200Hz
Answer: b
Explanation: The equation of sine wave is in the form $V_m$sinωt. So, by comparing we get ω=100. Frequency, f =ω/2=50Hz. The output of centre tapped full wave rectifier has double the frequency of inpu. Hence, f_{out} = 100Hz.

38. DC average current of a bridge full wave rectifier (where I_m is the maximum peak current of input).
a) $2I_m$
b) I_m
c) $I_m/2$
d) $1.414I_m$
Answer: b
Explanation: Average DC current of half wave rectifier is I_m. Since output of half wave rectifier contains only one half of the input. The average value is the half of the area of one half cycle of sine wave with peak I_m. This is equal to I_m.

39. DC power output of bridge full wave rectifier is equal to (I_m is the peak current and RL is the load resistance).
a) 2 $I_m^2R_L$
b) 4 $I_m^2R_L$
c) $I_m^2R_L$
d) I_m^2 $R_L/2$
Answer: b
Explanation: DC output power is the power output of the rectifier. We know V_{DC} for a bridge rectifier is $2V_m$ and I_{DC} for a bridge rectifier is $2I_m$. We also know $V_{DC}=I_{DC}/R_L$. Hence output power is $4I_m^2R_L$.

40. Ripple factor of bridge full wave rectifier is?
a) 1.414
b) 1.212
c) 0.482
d) 1.321
Answer: c
Explanation: Ripple factor of a rectifier measures the ripples or AC content in the output. It's obtained by dividing AC rms output with DC output. For full wave bridge rectifier it is 0.482.

41. If input frequency is 50Hz then ripple frequency of bridge full wave rectifier will be equal to_____
a) 200Hz
b) 50Hz
c) 45Hz
d) 100Hz
Answer: d
Explanation: Since in the output of bridge rectifier one half cycle is repeated, the frequency will be twice as that of input frequency. So, f=100Hz.

42. Transformer utilization factor of bridge full wave rectifier _____

a) 0.623
b) 0.812
c) 0.693
d) 0.825
Answer: b
Explanation: Transformer utilization factor is the ratio of AC power delivered to load to the DC power rating. This factor indicates effectiveness of transformer usage by rectifier. For bridge full wave rectifier it's equal to 0.693.

43. If peak voltage on a bridge full wave rectifier circuit is 5V and diode cut in voltage os 0.7, then the peak inverse voltage on diode will be_____
a) 4.3V
b) 9.3V
c) 8.6V
d) 3.6V
Answer: d
Explanation: PIV is the maximum reverse bias voltage that can be appeared across a diode in the circuit. If PIV rating of diode is less than this value breakdown of diode may occur.. Therefore, PIV rating of diode should be greater than PIV in the circuit, For bridge rectifier PIV is V_m-V_D = 5-1.4=3.6.

44. Efficiency of bridge full wave rectifier is_____
a) 81.2%
b) 50%
c) 40.6%
d) 45.33%
Answer: a
Explanation: It's obtained by taking ratio of DC power output to maximum AC power delivered to load. Efficiency of a rectifier is the effectiveness of rectifier to convert AC to DC. It's usually expressed inn percentage. For bridge full wave rectifier, it's 81.2%.

45. In a bridge full wave rectifier, the input sine wave is 40sin100t. The average output voltage is_____
a) 22.73V
b) 16.93V
c) 25.47V
d) 33.23V
Answer: c
Explanation: The equation of sine wave is in the form $E_m$sinωt.
Therefore, E_m=40. Hence output voltage is 2E_m=80V.

46. Number of diodes used in a full wave bridge rectifier is_____
a) 1
b) 2
c) 3
d) 4
Answer: d
Explanation: The model of a bridge rectifier is same as Wein Bridge. It needs 4 resistors. Bridge rectifier needs 4 diodes while centre tap configuration requires only one.

47. In a bridge full wave rectifier, the input sine wave is 250sin100t. The output ripple frequency will be_____
a) 50Hz
b) 200Hz

c) 100Hz
d) 25Hz
Answer: c
Explanation: The equation of sine wave is in the form of $E_m \sin\omega t$. So, ω=100 and frequency (f)=ω/2=50Hz. Since output of bridge rectifier have double the frequency of input, f=100Hz.

Prepared By Mr. Dolli S. P.	Verified By S. N. Navale Module Coordinator	Re-Verified By S N Navale Academic Coordinator	Approved By S.G.Tupe HOD EJ

Chapter 06-Bipolar Junction Transistor	Marks: -10

Content of Chapter: -

1. BJT: symbol, construction & working principle
2. Transistor as switch & amplifier
3. Input & Output Characteristics: CE, CB & CC configuration
4. Operating regions: cut-off, saturation & active
5. Transistor Parameters: CB gain, CE gain & CC gain, input resistance, output resistance

1. For a BJT, for common base configuration the input characteristics are represented by a plot between which of the following parameters?
a) V_{BE} and I_E
b) V_{BE} and I_B
c) V_{CE} and I_C
d) V_{CC} and I_C
Answer: a
Explanation: The input signal is applied between the base and the emitter terminals. Input current flowing is the base current and hence characteristics are represented by a plot between V_{BE} and I_B.

2. For a BJT, for common base configuration the output characteristics are represented by a plot between which of the following parameters?
a) V_{BE} and I_B
b) V_{CE} and I_C
c) V_{CB} and I_C
d) V_{CE} and I_B
Answer: c
Explanation: The input signal is applied between the collector and the emitter terminals. Input current flowing is the collector current and hence characteristics are represented by a plot between V_{CE} and I_C.

3. In a BJT, if the collector-base junction is reverse-biased and the base-emitter junction is forward-biased, which region is the BJT operating in?
a) Saturation region
b) Active region
c) Cutoff region
d) Reverse active region
Answer: b
Explanation: If the collector-base junction is reverse-biased and the base-emitter junction is forward-biased, then the BJT functions in the active region of the output characteristics.

4. In a BJT, if the collector-base junction is forward-biased and the base-emitter junction is forward-biased, which region is the BJT operating in?

a) Saturation region
b) Active region
c) Cutoff region
d) Reverse active region
Answer: a
Explanation: If the collector-base junction and the base-emitter junction are both forward-biased, then the BJT functions in the saturation region of the output characteristics.

5. In a BJT, if the collector-base junction and the base-emitter junction are both reverse-biased, which region is the BJT operating in?
a) Saturation region
b) Active region
c) Cutoff region
d) Reverse active region
Answer: c
Explanation: If the collector-base junction and the base-emitter junction are both reverse-biased, then the BJT functions in the cutoff region of the output characteristics.

6. From the given characteristics, what is the approximate value of I_C at I_B=30 uA and V_{CE}=10 V?

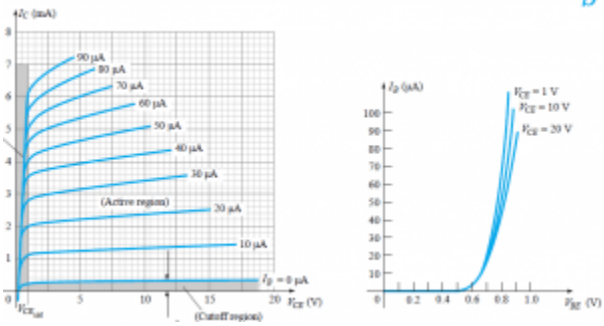

a) 3 mA
b) 3.4 mA
c) 0 mA
d) 2 mA
Answer: b
Explanation: At the intersection of I_B=30 uA and V_{CE}=10 V, I_C=3.4 mA.

7. From the given characteristics, what is the approximate value of I_C at V_{BE}=0.7 V and V_{CE}=15 V?

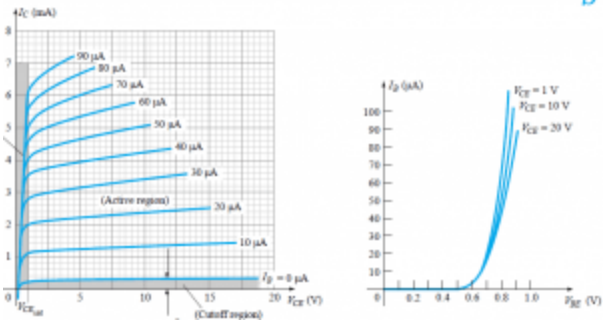

a) 3.4 mA
b) 0 mA
c) 2.5 mA
d) 10 mA
Answer: c

Explanation: From the characteristics, the value of I_B at V_{BE}=0.7V is 20uA. Now, from I_B=20 uA, we get I_C = 2.5 mA.

8. Which of the following correctly determines the relation between α and β?
a) β=α/(1-α)
b) α=β/(1-α)
c) β=α/(1-β)
d) β=α*(1-β)
Answer: a
Explanation: α and β are related as β=α/(1-α).
In a BJT, $\beta = I_C/I_B$. and $\alpha = I_C/I_E$
$\beta = \alpha I_E/I_B = (1+\beta)\alpha$
$\beta = \alpha + \alpha\beta$
$\beta = \alpha/1-\alpha$.

9. The value of I_C is precisely zero when the value of I_E is zero.
a) True
b) False
Answer: b
Explanation: When the value of I_E is zero, then the value of I_C is equal to I_{CBO} which is in the order of microamperes but not zero.

10. For common emitter configuration, which of the following is the correct relation?
a) $I_C < I_E$
b) $I_C = \beta I_B$
c) $I_C = \alpha I_E$
d) $I_C = I_E$
Answer: d
Explanation: All the relations hold true i.e. $I_C = \beta I_B$ and $I_C = \alpha I_E$. As α<1, hence $I_C < I_E$.

11. Which of the following condition is true for cut-off mode?
a) The collector current Is zero
b) The collector current is proportional to the base current
c) The base current is non zero
d) All of the mentioned
Answer: a
Explanation: The base current as well as the collector current are zero in cut-off mode.

12. Which of the following is true for the cut-off region in an npn transistor?
a) Potential difference between the emitter and the base is smaller than 0.5V
b) Potential difference between the emitter and the base is smaller than 0.4V
c) The collector current increases with the increase in the base current
d) The collector current is always zero and the base current is always non zero
Answer: b
Explanation: Both collector and emitter current are zero in cut-off region.

13. Which of the following is true for a typical active region of an npn transistor?
a) The potential difference between the emitter and the collector is less than 0.5 V
b) The potential difference between the emitter and the collector is less than 0.4 V

c) The potential difference between the emitter and the collector is less than 0.3 V
d) The potential difference between the emitter and the collector is less than 0.2 V
Answer: c
Explanation: Most commonly used transistors have Vce less than 0.4 V for the active region.

14. Which of the following is true for the active region of an npn transistor?
a) The collector current is directly proportional to the base current
b) The potential difference between the emitter and the collector is less than 0.4 V
c) All of the mentioned
d) None of the mentioned
Answer: c
Explanation: The base current and the collector current are directly proportional to each other and the potential difference between the collector and the base is always less than 0.4 V.

15. Which of the following is true for the saturation region of BJT transistor?
a) The collector current is inversely proportional to the base current
b) The collector current is proportional to the square root of the collector current
c) The natural logarithm of the collector current is directly proportional to the base current
d) None of the mentioned
Answer: b
Explanation: The collector current is directly proportional to the base current in the saturation region of the BJT.

16. Which of the following is true for a npn transistor in the saturation region?
a) The potential difference between the collector and the base is approximately 0.2V
b) The potential difference between the collector and the base is approximately 0.3V
c) The potential difference between the collector and the base is approximately 0.4V
d) The potential difference between the collector and the base is approximately 0.5V
Answer: d
Explanation: The commonly used npn transistors have a potential difference of around 0.5V between he collector and the base.

17. The potential difference between the base and the collector Vcb in a pnp transistor in saturation region is _____
a) -0.2 V
b) -0.5V
c) 0.2 V
d) 0.5 V
Answer: b
Explanation: The value of Vcb is -0.5V for a pnp transistor and 0.5V for an npn transistor.

18. For a pnp transistor in the active region the value of Vce (potential difference between the collector and the base) is
a) Less than 0.3V
b) Less than 3V
c) Greater than 0.3V
d) Greater than 3V
Answer: a
Explanation: For a pnp transistor Vce is less than 0.3V, for an npn transistor it is greater than 0.3V.

19. Which of the following is true for a pnp transistor in active region?
a) CB junction is reversed bias and the EB junction is forward bias
b) CB junction is forward bias and the EB junction is forward bias
c) CB junction is forward bias and the EB junction is reverse bias
d) CB junction is reversed bias and the EB junction is reverse bias
Answer: a
Explanation: Whether the transistor in npn or pnp, for it be in active region the EB junction must be reversed bias the CB junction must be forward bias.

20. Which of the following is true for a pnp transistor in saturation region?
a) CB junction is reversed bias and the EB junction is forward bias
b) CB junction is forward bias and the EB junction is forward bias
c) CB junction is forward bias and the EB junction is reverse bias
d) CB junction is reversed bias and the EB junction is reverse bias
Answer: b
Explanation: Whether the transistor in npn or pnp, for it be in saturation region the EB junction must be forward bias the CB junction must be forward bias.
This set of Analog Circuits Multiple Choice Questions & Answers (MCQs) focuses on “BJT Construction and Operation”.

21. Which of the following is not a valid type of BJT?
a) PNP
b) NPN
c) PPN
d) NNP
Answer: c
Explanation: A BJT is a device with a layer of semiconductor sandwiched between 2 unlike types of semiconductors and hence, PPN is not a valid type of a BJT.

22. In a BJT, the outer layers are much more thick as compared to the middle layer.
a) True
b) False
Answer: a
Explanation: In a BJT, the thickness of the middle layer or the base is thin as compared to the collector and emitter.

23. In a BJT, which of the following layers is heavily doped?
a) Collector
b) Emitter
c) Base
d) Electron
Answer: b
Explanation: The emitter is the most heavily doped and contains the maximum amount of charge carriers. It is the emitter’s task to inject carriers into the base. These bases are thin and lightly doped. For npn B JT, emitter injects electrons, and for pnp, it injects holes.

24. Considering the resistances of emitter, collector and base to be R_e, R_c and R_b respectively, which of the following is the correct statements?

a) $R_e > R_b > R_c$
b) $R_c > R_b > R_e$
c) $R_b > R_c > R_e$
d) $R_b = R_c > R_e$
Answer: c
Explanation: As the base is lightly doped, the number of free charge carriers are less and hence the resistance is high and as the emitter is the most highly doped, its resistance is low.

25. In a pnp-BJT, when the E-B junction is forward biased and no voltage is applied across C-B junction, what happens to the width of the depletion region in the E-B junction?
a) Increases
b) Decreases
c) Remains same
d) Can't be determined
Answer: b
Explanation: On application of a forward bias voltage across E-B junction, the width of the depletion region decreases.

26. Which of the following statements is true about proper functioning of a BJT?
a) One junction is forward biased and one is reverse biased
b) Both junctions are forward biased
c) Both junctions are reverse biased
d) Can't be determined
Answer: a
Explanation: In a BJT, depending upon the biasing of the two junctions, the BJT behaves differently. The BJT may be in saturation, wherein it acts like a short circuit, or it may be in cut-off, i.e an open circuit. The BJT can be either in forward active or reverse active mode. Active mode is the common mode, used in BJTs and obtained by one forward biased and one reverse biased junction.

27. What is the typical order of magnitude of the base current for a BJT?
a) 10^{-8}
b) 10^{-9}
c) 10^{-6}
d) 10^{-3}
Answer: c
Explanation: As the base current is quite lower as compared to the collector and emitter current, it is usually in the order of microamperes.

28. The collector current in a BJT is temparature-independent.
a) True
b) False
Answer: a
Explanation: The collector current I_C in a BJT is made up of two components – one due to majority carriers and the other due to minority carriers. The component of I_C due to minority carriers i.e I_{CO} is temparature sensitive.

29. Which of the following currents in a BJT is also called leakage current?
a) I_C
b) I_E

c) I_{CO}
d) I_{CBO}
Answer: a
Explanation: Leakage current in BJT is represented by I_{CO}, which is due to the flow of minority carriers in the transistor. It consists of I_{CBO} and I_{CEO}. I_{CO} depends on temperature, doubling with 10° rise in temperature. It thus effects total collector current, I_C, and hence affects the power dissipation.

30. Which of the following relations are correct?
a) $I_E + I_B = I_C$
b) $I_C + I_B = I_E$
c) $I_E + I_C = I_B$
d) $I_B + I_E = I_B$
Answer: b
Explanation: On applying KCL to the BJT, we get $I_C + I_B = I_E$.

31. Which of the following is the correct relationship between base and emitter current of a BJT?
a) $I_B = \beta I_E$
b) $I_B = I_E$
c) $I_B = (\beta + 1) I_E$
d) $I_E = (\beta + 1) I_B$
Answer: d
Explanation: For a BJT, the collector current $I_C = \beta I_B$ and $I_E = I_C + I_B$
Hence, $I_E = (\beta + 1) I_B$.

32. For best operation of a BJT, which region must the operating point be set at?
a) Active region
b) Cutoff region
c) Saturation region
d) Reverse active region
Answer: a
Explanation: Operating point for a BJT must always be set in the active region to ensure proper functioning. Setting up of Q-point in any other region may lead to reduced functionality.

33. From the given circuit, using a silicon transistor, what is the value of I_{BQ}?

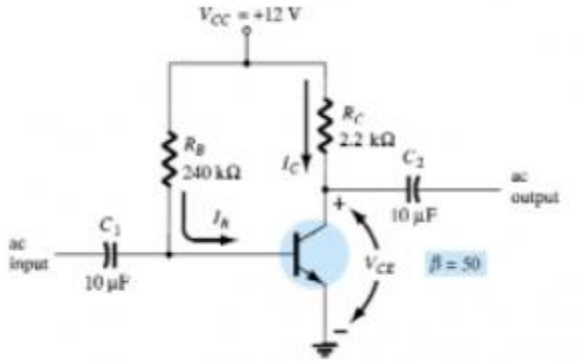

a) 47.08 mA
b) 47.08 uA
c) 50 uA
d) 0 mA
Answer: b

Explanation: Consider the BJT to be in saturation. Then I_C=12-0.2/2.2k=5.36 mA
And I_B=12-0.8/240k=0.047 mA
I_{BMIN}=I_{CSAT}/β=5.09/50=0.1072mA which is greater than above I_B.
Hence transistor is in the active region.
Thus I_C=βI_B.
V_{BE}=0.7V
I_B=12-0.7/240=47.08μA

34. From the given circuit, using a silicon BJT, what is the value of V_{CEQ}?

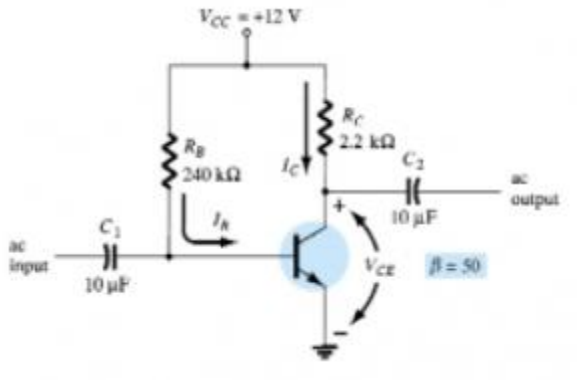

a) 7 V
b) 0.7 V
c) 6.83 V
d) 7.17 V
Answer: c
Explanation: Consider the BJT to be in saturation. Then I_C=12-0.2/2.2k=5.36 mA
And I_B=12-0.8/240k=0.047 mA
I_{BMIN}=I_{CSAT}/β=5.09/50=0.1072mA which is greater than above I_B.
Hence transistor is in the active region.
Thus I_C=βI_B.
V_{BE}=0.7V
I_B=12-0.7/240=47.08μA
I_C=50×47.08=2.354 mA
V_{CE}=V_{CC}-I_CR_C=12-2.354*2.2=12-5.178=6.83V.

35. From the given circuit, using a silicon BJT, what is the value of V_{BC}?

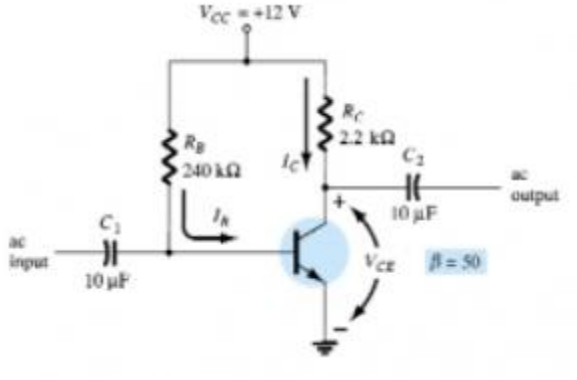

a) 6.13 V
b) -6.13 V
c) 7 V

d) -7 V
Answer: b
Explanation: Consider the BJT to be in saturation. Then I_C=12-0.2/2.2k=5.36 mA
And I_B=12-0.8/240k=0.047 mA
$I_{BMIN}=I_{CSAT}/\beta$=5.09/50=0.1072mA which is greater than above I_B.
Hence transistor is in the active region.
Thus $I_C=\beta I_B$.
V_{BE}=0.7V
I_B=12-0.7/240=47.08μA
I_C=50×47.08=2.354 mA
$V_{CE}=V_{CC}-I_CR_C$=12-2.354*2.2=12-5.178=6.83V
Hence V_{BC} = 0.7-6.83 = -6.13V.

36. From the given circuit, using silicon BJT, what is the value of the saturation collector current?

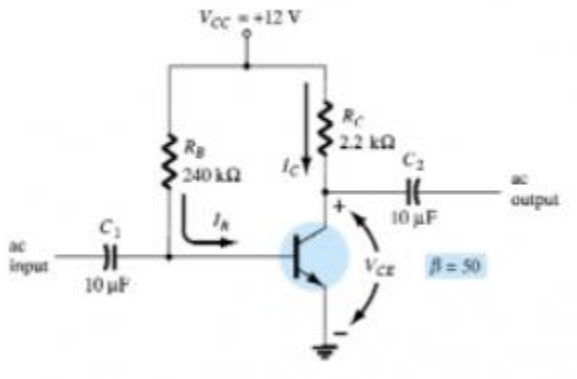

a) 5 mA
b) 5.36 mA
c) 5.45 mA
d) 10.9 mA
Answer: b
Explanation: To obtain an approximate answer, under saturation the BJT is ON and hence acts as a short circuit. However, ideally a drop exists for the transistor which is a fixed value. For an exact answer, if the BJT is a Silicon transistor, then drop V_{CE} = 0.2V and current is 12-0.2/2.2=5.36 mA.

37. In the given circuit, what is the value of I_C if the BJT is made of Silicon?

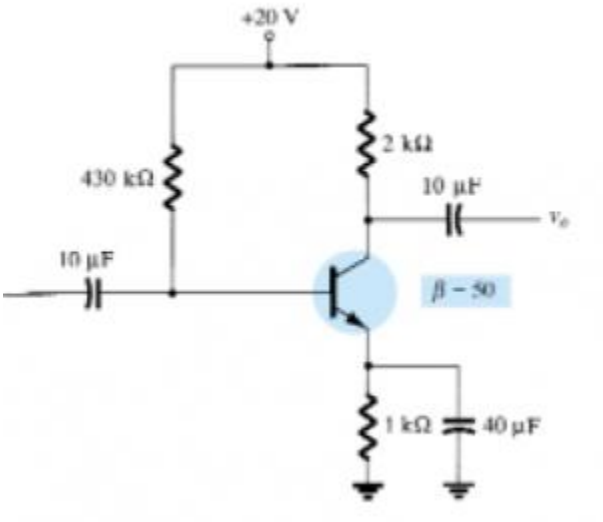

a) 2.01 mA
b) 2.01 uA
c) 10.05 mA
d) 10.05 uA
Answer: a
Explanation: Consider the BJT to be in saturation. Then I_C=20-0.2/2k=9.9 mA
And I_B=20-0.8/430k=0.044 mA
$I_{BMIN}=I_{CSAT}/\beta$=5.09/50=0.198mA which is greater than above I_B.
Hence transistor is in the active region.
Thus $I_C=\beta I_B$.
V_{BE}=0.7V
I_B=20-0.7/430=44.88μA
I_C=50×44.88=2.24 mA.

38. In the given circuit, using a silicon BJT, what is the value of V_{CE}?

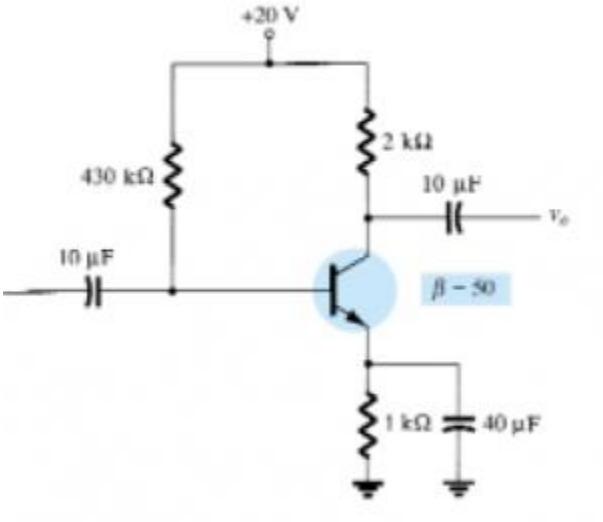

a) 20 V
b) 15.52 V
c) 14.98 V
d) 13.97 V
Answer: b

Explanation: Consider the BJT to be in saturation. Then I_C=20-0.2/2k=9.9 mA
And I_B=20-0.8/430k=0.044 mA
$I_{BMIN}=I_{CSAT}/\beta$=5.09/50=0.198mA which is greater than above I_B.
Hence transistor is in the active region.
Thus $I_C=\beta I_B$.
V_{BE}=0.7V
I_B=20-0.7/430=44.88μA
I_C=50×44.88=2.24 mA
V_{CE}=20-2.24*2=15.52V.

39. In the given circuit, what is the value of V_E when using a silicon BJT?

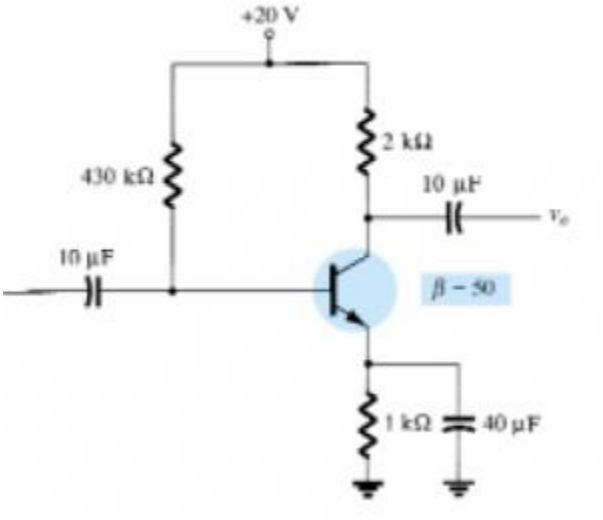

a) 2.01 V
b) 0.28 V
c) 0 V
d) 2.28 V
Answer: d
Explanation: Consider the BJT to be in saturation. Then I_C=20-0.2/2k=9.9 mA
And I_B=20-0.8/430k=0.044 mA
$I_{BMIN}=I_{CSAT}/\beta$=5.09/50=0.198mA which is greater than above I_B.
Hence transistor is in the active region.
Thus $I_C=\beta I_B$.
V_{BE}=0.7V
I_B=20-0.7/430=44.88μA
I_C=50×44.88=2.24 mA
V_{CE}=20-2.24*2=15.52V
$V_E=I_ER_E=(1+\beta)I_BR_E$=51*44.88*1=2.28V.

40. In the given circuit using a silicon BJT, what is the value of saturation collector current?

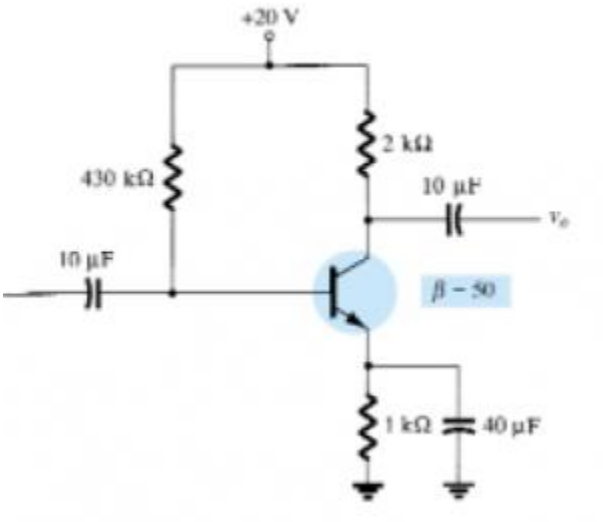

a) 10 mA
b) 8.77 mA
c) 6.67 mA
d) 5 mA
Answer: c
Explanation: To obtain an approximate answer, under saturation the BJT is ON and hence acts as a short circuit. However, ideally a drop exists for the transistor which is a fixed value. For an exact answer, if the BJT is a Silicon transistor, then drop V_{CE} = 0.2V and current is 20-0.2/2.2=9.9 mA.

41. BJT stands for _____
a) Bi-Junction Transfer
b) Blue Junction Transistor
c) Bipolar Junction Transistor
d) Base Junction Transistor
Answer: c
Explanation: BJT stands for Bipolar Junction Transistor. It was the first transistor to be invented. It is widely used in circuits.

42. The doped region in a transistor are _____
a) Emitter and Collector
b) Emitter and Base
c) Collector and Base
d) Emitter, Collector and Base
Answer: d
Explanation: There are three doped regions forming two p-n junctions between them. There are two types of transistors n-p-n transistor and p-n-p transistor.

43. Which region of the transistor is highly doped?
a) Emitter
b) Base
c) Collector
d) Both Emitter and Collector
Answer: a
Explanation: In a transistor, emitter is of moderate size and heavily doped. Collector is moderately doped and larger as compared to the emitter. Base is very thin and lightly doped.

44. Both the junctions in a transistor are forward biased.
a) True
b) False
Answer: b
Explanation: Emitter-base junction of the transistor is forwards biased while the collector-base junction of the transistor is reverse biased or vice versa depending on the condition desired.

45. Which junction is forward biased when transistor is used as an amplifier?
a) Emitter-Base
b) Emitter-Collector
c) Collector-Base
d) No junction is forward biased
Answer: a
Explanation: For Transistor to be used as an amplifier, the emitter-base junction is forward biased and the base-collector region is reverse biased. This state is called an active state.

46. If I_e is the current entering the emitter, I_b is the current leaving the base and I_c is the current leaving the collector in a p-n-p transistor used for amplification, what is the relation between I_e, I_b and I_c?
a) $I_e < I_c$
b) $I_c < I_b$
c) $I_b < I_c$
d) $I_e < I_b + I_c$
Answer: c
Explanation: The total current entering the emitter, I_e, goes to the base form where most of the current enters the collector and a very small fraction of the current leaves the base. Thus, $I_b < I_c$.

47. In the active state, the emitter-base junction has a higher resistance than the collector-base junction.
a) True
b) False
Answer: b
Explanation: Since the emitter-base junction is forward biased, their resistance is lower than the collector-base junction, which is reverse biased.

48. From the figure, what is β_{ac} when V_{CE} is 10V and I_c is 4 mA?

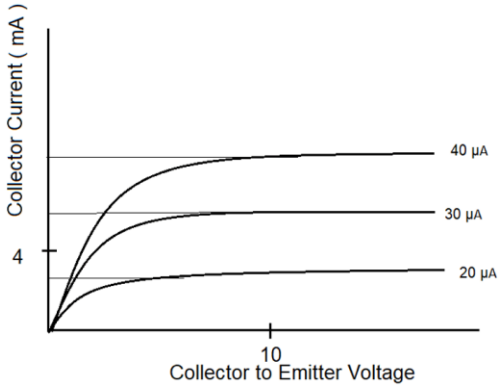

a) 50
b) 100
c) 150
d) 200

Answer: c
Explanation: We know, $\beta_{ac} = \Delta I_c/\Delta I_b$
Now, at V_{CE} = 10V, we read two values of I_c from the graph.
Then, ΔI_b = 10 μA, ΔI_c = 1.5 mA
Therefore, β_{ac} = 1.5 mA/10 μA
= 150.

49. In which state is the switch said to be on?

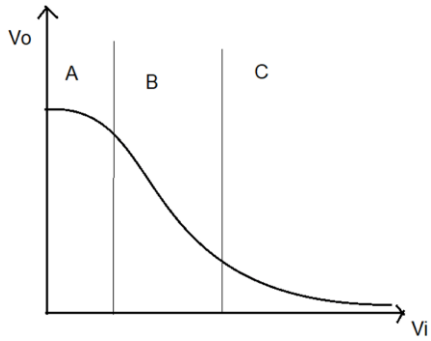

a) A
b) B
c) C
d) Neither region
Answer: c
Explanation: A is the Cut-off region, B is the Active Region and C is the saturation region. When the transistor is not conducting, it is said to be switched off and when it is Region C it is said to be switched on.

50. A low input to the transistor gives _____
a) Low output
b) High Output
c) Normal Output
d) No Output
Answer: b
Explanation: A low input to the transistor gives a high output and a high input gives a low output. The switching circuits are designed such a way that the transistor does not stay in the active state.

51. In a CE transmitter amplifier, if the amplification factor is 150 and the collector voltage is 4 V and resistance is 2 kΩ, what should be the value of RB, given that the dc base current is 10 times the signal current?
a) 5 kΩ
b) 10 kΩ
c) 15 kΩ
d) 20 kΩ
Answer: d
Explanation: Here, the output voltage is 4 V.
So, i_c = 4/2000
= 2 mA
The signal current through the base, $I_B = i_c/\beta$
= 0.013 mA
The dc base current = 0.13 mA
Assuming here, that V_{BE} = 1.4 V, we get

R_B = (4.0-1.4)/0.13
= 20 kΩ.

52. From the output characteristics of a transistor, one cannot calculate _____
a) I_B
b) V_{BE}
c) I_c
d) V_{CE}
Answer: b
Explanation: The output characteristics graph for a transistor gives us the relation between the collector current and the emitter voltage. It also gives us the value of base current. But it gives no information about the base-emitter voltage.

53. What is the expression for the Current Amplification factor?
a) ΔIcΔVc
b) ΔVcΔIc
c) (ΔICΔIB)VCE
d) (ΔICΔIB)VBE
Answer: c
Explanation: Amplification factor can be defined as the ratio of the change in collector current to the change in base current at a constant collector-emitter voltage when the transistor is in active state. The correct expression for the amplification factor is: (ΔICΔIB)VCE.

54. In the output characteristics, the resistance is the _____
a) Slope of the curve
b) Trace of the curve
c) Asymptote of the curve
d) Reciprocal of the slope of the curve
Answer: d
Explanation: The reciprocal of the slope of the linear part of the output characteristic gives the value of the output resistance, which is given by (ΔVCEΔIC)IB.

55. The output in an oscillator is _____
a) Discontinuous
b) Oscillating
c) Self-sustained
d) Spiked
Answer: c
Explanation: In an oscillator, we get ac output without any external input signal. Thus, the output in an oscillator is self-sustained. To attain this, an amplifier is taken, which uses a transistor.

56. Find the maximum allowed output negative swing without the transistor entering saturation, and
a) 1.27 mV
b) 1.47 mV
c) 1.67 mV
d) 1.87 mV
Answer: d

Explanation:

At saturation $v_{CEsat} = 0.3V$

$\therefore v_C = 1 + \Delta V = 0.3.$

$\Delta v = -0.7V$

$\because v_o = 0.3V \quad i_C = \frac{10-0.3}{R_C}$

$\frac{i_{C2}}{i_{C1}} = \frac{9.7/R_C}{(10-1)/R_C} = e^{\Delta v/V_T}$

$\therefore$ Maximum input signal

$\Delta v = 0.025 \ln \frac{9.7}{9} = 1.87mV$

57. The corresponding maximum input signal permitted is
a) 1.64 mV
b) 1.74 mV
c) 1.84 mV
d) 1.94 mV
Answer: d
Explanation: If we assume linear operation right to saturation we can use the gain A_v to calculate the maximum input signal. Thus for an output swing $\Delta V_o = 0.8$ we have $\Delta V_i = \Delta V_o / A_v = -0.7 / -360 = 1.94$ mV.

58. For the amplifier circuit in the below figure with Vcc = +10 V, Rc = 1 kΩ and the DC collector bias current equal to Ic. Find the voltage gain.
a) 100 Ic
b) 200 Ic
c) 400 Ic
d) 800 Ic
Answer: c
Explanation:

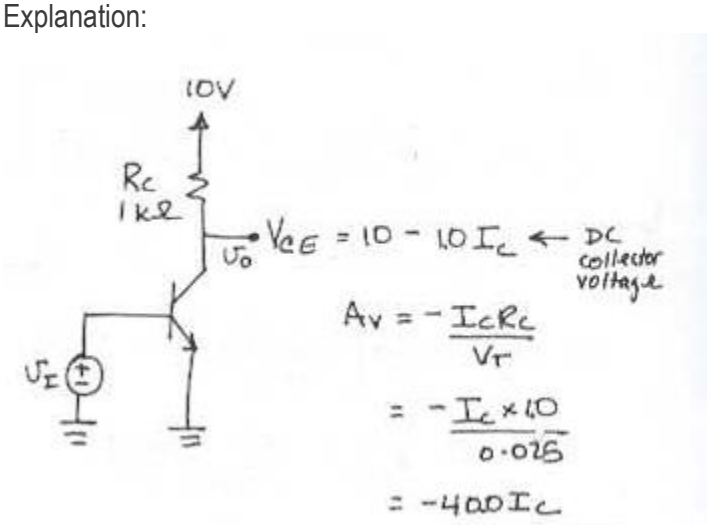

59. For the amplifier circuit in the below figure with Vcc = +10 V, Rc = 1 kΩ and the DC collector bias current equal to Ic. The maximum possible positive output signal swing as determined by the need to keep the transistor in the active region.
a) 9.7 + Ic

b) 9.7 – Ic
c) 10.3 + Ic
d) 10.3 – Ic
Answer: a
Explanation: Assuming the output voltage V_o = 0.3v is the lowest V_{ce} to stay out of saturation.
$V_o = 0.3 = 10 - I_cR_c$
$= 10 - I_cR_c + \Delta V_o$
$\Delta V_o = -10 + 0.3 + I_c*1$.

60. For the amplifier circuit in the below figure with Vcc = +10 V, Rc = 1 kΩ and the DC collector bias current equal to Ic. The maximum possible negative output signal swing as determined by the need to keep the transistor in the active region.
a) 0.1 Ic
b) Ic
c) 10 Ic
d) 100 Ic
Answer: b
Explanation: Maximum output voltage before the Transistor is cutoff.
$V_{ce} + \Delta V_o = V_{cc}$
$\Delta V_o = V_{cc} - V_{ce}$
$= 10 - 10 + 10\ I_c$
$= 10\ I_c$.

61. The transistor in the circuit below is biased at a dc collector current of 0.5 mA. What is the voltage gain?

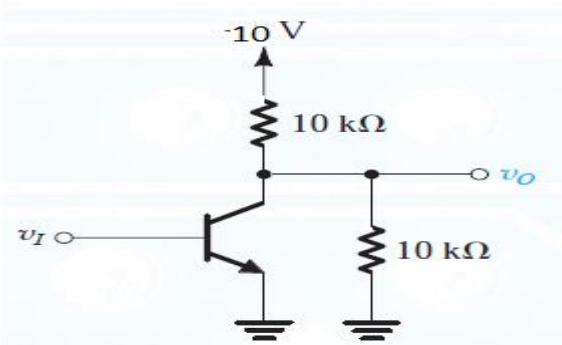

a) -1 V/V
b) -10 V/V
c) -100 V/V
d) -1000 V/V
Answer: c
Explanation:

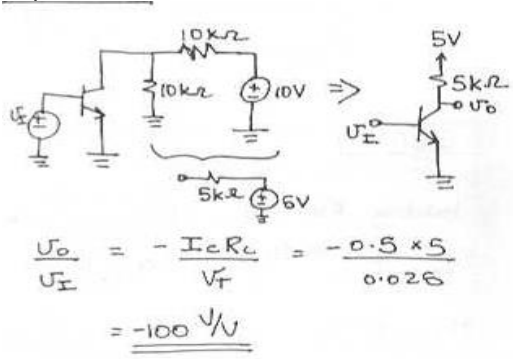

62. For a BJt Vt is 5 V, Rc = 1000 ohm and bias current Ic is 12 mA. The value of the voltage gain is _____
a) -1.2 V/V
b) -2.4 V/V
c) -3.6 V/V
d) -4.8 V/V
Answer: b
Explanation: Voltage gain is (Ic X Rc) / Vt.

63. For the BJT amplifier circuit with Vcc = +10 V, Rc = 1 kΩ and the DC collector bias current equal to 5 mA. The value of the voltage gain is _____
a) -2 V/V
b) -4 V/V
c) -10 V/V
d) -20 V/V
Answer: a
Explanation: The voltage is 400 X Ic where Ic is 5 mA.

64. For the BJT amplifier circuit with Vcc = +10 V, Rc = 1 kΩ and the DC collector bias current equal to 5 mA. The maximum possible positive output signal swing as determined by the need to keep the transistor in the active region.
a) -1.7 V
b) -2.7 V
c) -3.7 V
d) -4.7 V
Answer: d
Explanation: The maximum voltage swing is given by -10 + 0.3 + (Ic X Rc). Putting Ic as 5 mA, we get -4.7 mV.

65. For the BJT amplifier circuit with Vcc = +10 V, Rc = 1 kΩ and the DC collector bias current equal to 5 mA. The maximum possible negative output signal swing as determined by the need to keep the transistor in the active region.
a) 0.5 V
b) 1 V
c) 5 V
d) 10 V
Answer: c
Explanation: It is given by -10 + 10 + (Ic X Rc). Putting Ic as 5 mA we get 5V.

Prepared By Mr. Dolli S. P.	Verified By S. N. Navale Module Coordinator	Re-Verified By S N Navale Academic Coordinator	Approved By S.G.Tupe HOD EJ