Zeal Education Society's

ZEAL POLYTECHNIC, PUNE.

NARHE | PUNE -41 | INDIA

FIRST YEAR (FY)

DIPLOMA IN ELECTRICAL ENGINEERING

SCHEME: I **SEMESTER: II**

NAME OF SUBJECT: ELEMENTS OF ELECTRONICS

SUBJECT CODE: 22213

MSBTE QUESTION PAPERS & MODEL ANSWERS

1. MSBTE SUMMER-18 EXAMINATION
2. MSBTE WINTER-18 EXAMINATION
3. MSBTE SUMMER-19 EXAMINATION
4. MSBTE WINTER-19 EXAMINATION

22213

21718

3 Hours / 70 Marks Seat No. | | | | | | | | |

Instructions :

(1) All Questions are *compulsory.*

(2) Answer each next main Question on a new page.

(3) Illustrate your answers with neat sketches wherever necessary.

(4) Figures to the right indicate full marks.

(5) Assume suitable data, if necessary.

(6) Use of Non-programmable Electronic Pocket Calculator is permissible.

(7) Mobile Phone, Pager and any other Electronic Communication devices are not permissible in Examination Hall.

Marks

1. Attempt any FIVE of the following : 10

(a) Name the components of following symbols :

(i) 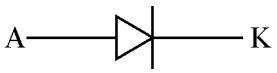

(ii) 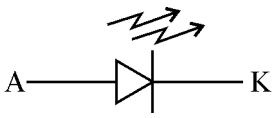

(b) Define the term 'Ripple factor' for rectifier.

(c) State relation between emitter current (I_E), Base current (I_B) and collector current (I_C) of BJT.

(d) Write three terminal voltage regulator IC for obtaining :

(i) + 5V

(ii) –12V

(e) 'Germanium diode knee voltage is lower than silicon diode knee voltage.' Justify.

(f) Define the term 'Load Regulation'.

(g) Draw symbol and write truth table of EX-OR gate.

2. Attempt any THREE of the following : 12

(a) State working principle of photo diode. List out its three applications.

(b) Sketch circuit diagram and input, output waveform of Half wave rectifier. State its efficiency.

(c) Compare BJT common base configuration with common collector configuration on the basis of

(i) Current gain

(ii) Voltage gain

(iii) Input impedance

(iv) Output impedance

(d) Sketch block diagram of D.C. regulated power supply. State functions of each block.

3. Attempt any THREE of the following : 12

(a) Explain with circuit diagram operation of zener diode as a voltage regulator.

(b) State type of feedback used for oscillator circuit. Explain Barkhausen criteria.

(c) State condition for both junction to operate BJT in cut off state, Active state and saturation state.

(d) Name the type of rectifier for each of following feature :

(i) Highest rectifier efficiency

(ii) Highest form factor

(iii) Two diode rectifier circuit

(iv) PIV = $2V_m$

4. Attempt any THREE of the following : 12

(a) Sketch circuit diagram of Hartely oscillator. State expression for frequency of oscillation.

(b) Sketch circuit diagram of bridge rectifier with LC filter. State function of each component.

(c) In a common base configuration, the emitter current is 1 mA. If the emitter circuit is open, the collector current is 50 μA. Find total collector current. Assume α (Alpha) = 0.92.

(d) Sketch and label V-I characteristics of P-N junction diode. Write steps to calculate dynamic forward bias resistance.

(e) Explain operation of series inductor filter and find out its ripple factor.

5. Attempt any TWO of the following : 12

(a) A transistor is connected in common emitter (CE) configuration with collector supply V_{CC} of 8V. Voltage drop across resistance RC connected in series with collector is 0.5 V. The value of RC is 800 Ω. If alpha (α) equal to 0.96, calculate :

(i) Collector-emitter voltage

(ii) Collector current

(iii) Base current

(b) Sketch pin configuration of IC 723. State functions of each pin. Sketch circuit diagram for obtaining 6V output d.c. regulated voltage using IC 723.

(c) Implement the fundamental logic gates 'OR gate', 'AND gate', 'NOT gate' using only NAND gates.

6. Attempt any TWO of the following : 12

(a) Sketch circuit diagram of RC phase shift oscillator. If value of capacitor $C = C_1 = C_2 = C_3 = 5$ pF and frequency of oscillation is 800 Hz, calculate value of resistor R, ($R = R_1 = R_2 = R_3$).

(b) For common emitter configuration sketch input characteristics for two different values of V_{CE} and output characteristics for two different values of I_B. Write formula for input resistance and output resistance.

(c) Perform following number system conversion :

(i) $(589)_{10} = (\quad\quad)_2$

(ii) $(101101)_2 = (\quad\quad)_{16}$

(iii) $(413)_8 = (\quad\quad)_2$

(iv) $(5AF)_{16} = (\quad\quad)_{10}$

(v) $(AC8)_{16} = (\quad\quad)_2$

(vi) $(106)_8 = (\quad\quad)_{10}$

Important suggestions to examiners:

1) The answers should be examined by key words and not as word-to-word as given in the model answer scheme.
2) The model answer and the answer written by candidate may vary but the examiner may try to assess the understanding level of the candidate.
3) The language errors such as grammatical, spelling errors should not be given more importance. (Not applicable for subject English and communication skills)
4) While assessing figures, examiner may give credit for principle components indicated in a figure. The figures drawn by candidate and model answer may vary. The examiner may give credit for any equivalent figure drawn.
5) Credits may be given step wise for numerical problems. In some cases, the assumed constant values may vary and there may be some difference in the candidate's answers and model answer.
6) In case some questions credit may be given by judgment on part of examiner of relevant answer based on candidate understands.
7) For programming language papers, credit may be given to any other program based on equivalent concept.

Q.1	**Attempt any FIVE of the following :**	**10 Marks**
a)	**Name the components of following symbols :** **(i)** 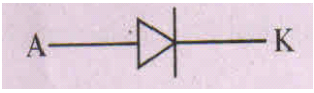 **ii)** 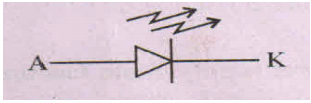	
Ans	**i)** 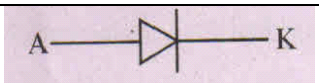 **: Semiconductor Diode**	**(1 Mark)**
	ii) 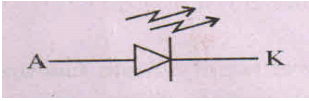 **: Light Emitting Diode**	**(1 Mark)**
b)	**Define the term 'Ripple factor' for rectifier.**	
Ans	**Ripple factor**: The ratio of RMS value of ac component present in the waveform to the dc component in the waveform is called as ripple factor. OR The unwanted AC components present in output waveform of a rectifier is called as ripple factor	**(2 Marks)**
c)	**State relation between emitter current (I_E), Base current (I_B) • and collector current (Ic) of BJT.**	
Ans	$I_E = Ic + I_B$ $I_E = (1+\beta)\, I_B$	**(2 Marks)**
d)	**Write three terminal voltage regulator IC for obtaining : (i) + 5V (ii) —12V**	
Ans	**(i) Terminal voltage regulator IC for obtaining : + 5V : IC 7805** **(ii) Terminal voltage regulator IC for obtaining : - 12V : IC 7912**	**(1 Mark)** **(1 Mark)**

e) 'Germanium diode knee voltage is lower than silicon diode knee voltage.' Justify.

Ans **Justification:** **(2 Marks)**

The band gap between conduction and valence band for Germanium (0.66eV) is less as compared to Silicon (1.11eV).Hence less energy is required to start conduction in Germanium diode.

f) Define the term 'Load Regulation'.

Ans **Load Regulation** : **(2 Marks)**

Load regulation is the ability of a power supply to maintain a constant output voltage irrespective of any changes in load current.

$$Load\ regulation = \left(\frac{V_{NL} - V_{FL}}{V_{FL}}\right) \times 100\%$$

g) Draw symbol and write truth table of EX-OR gate.

Ans **Symbol and truth table of EX-OR :** **(1 Mark for symbol & 1 Mark for Truth table)**

Exclusive-OR gate

A	B	Output
0	0	0
0	1	1
1	0	1
1	1	0

Q.2 Attempt any THREE of the following : 12 Marks

a) State working principle of photo diode. List out its three applications.

Ans: Diagram of photo diode : **(1 Mark)**

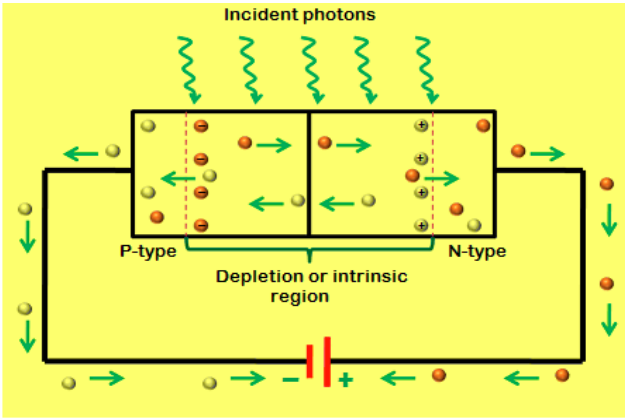

Working principle of photo diode : **(2 Marks)**

When photons of energy greater than 1.1 eV hit the diode, electron-hole pairs are created. The intensity of photon absorption depends on the energy of photons – the lower the energy of photons, the deeper the absorption is. This process is known as the inner photoelectric effect.

If the absorption occurs in the depletion region of the p-n junction, these hole pairs are swept from the junction - due to the built-in electric field of the depletion region. As a result, the holes move toward the anode and the electrons move toward the cathode, thereby producing photocurrent.

Applications principle of photo diode : **(1 Mark)**

Cameras, Medical devices, Smoke detector, Optical communication devices, Position sensors, Bar code scanners, Automotive devices, Surveying instruments

b) Sketch circuit diagram and input, output waveform of Half wave rectifier. State its efficiency.

Ans: **Half wave Rectifier (Circuit) :-** **(Circuit - 2 Mark)**

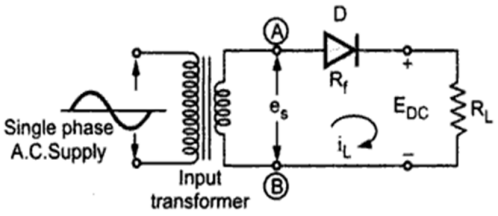

Waveform: **(Waveform - 1 Mark)**

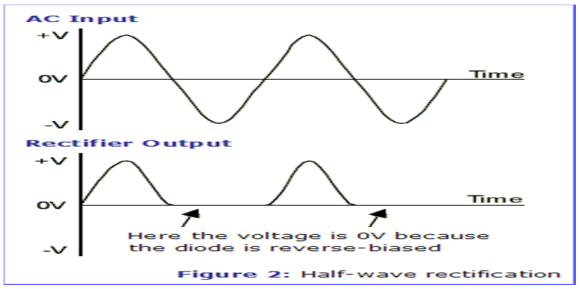

Figure 2: Half-wave rectification

Efficiency : 40.6 % **(1 Mark)**

c) Compare BJT common base configuration with common collector configuration on the basis of (i) Current gain (ii) Voltage gain (iii) Input impedance (iv) Output impedance

Ans: **Comparison :** **(4 Marks)**

Parameter	Common Base	Common Collector
Current gain	Low (About 1)	High (1+β)
Voltage gain	High	1
Input impedance	Low	High
Output impedance	High	Low

d) Sketch block diagram of D.C. regulated power supply. State functions of each block.

Ans: **Diagram :** **(2 Mark)**

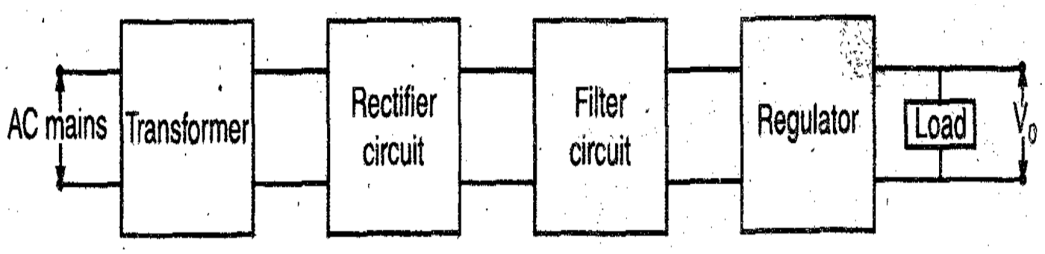

Functions of each block: **(2 Mark)**

1) Transformer:

It Converts an AC input source to AC required output without changing frequency. The transformer is step up or step down transformer.

2) Rectifier:

It is a circuit which is used to convert AC into pulsating DC. A rectifying diode is used.

3) Filter:

It is a circuit used to convert pulsating DC into pure DC. A inductor and capacitors are used as filter

4) Voltage regulator:

An unregulated DC voltage is converted into regulated DC voltage. IC 78XX & 79XX series are used as regulator.

Q.3	**Attempt any THREE of the following :**	**12 Marks**
a)	**Explain with circuit diagram operation of zener diode as a voltage regulator.**	

Ans: **Diagram of zener diode as voltage regulator:** **(2 Mark)**

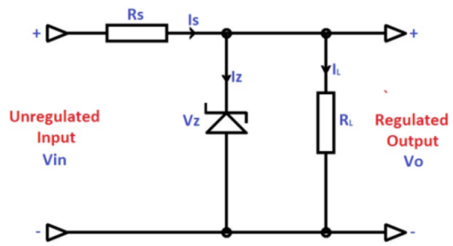

Working: **(2 Mark)**

Zener Diodes are widely used as Shunt Voltage Regulators to regulate voltage across small loads. Zener Diodes have a sharp reverse breakdown voltage and breakdown voltage will be constant for a wide range of currents. Thus we will connect the zener diode parallel to the load such that the applied voltage will reverse bias it. Thus if the reverse bias voltage across the zener diode exceeds the knee voltage, the voltage across the load will be constant.

Characteristics :

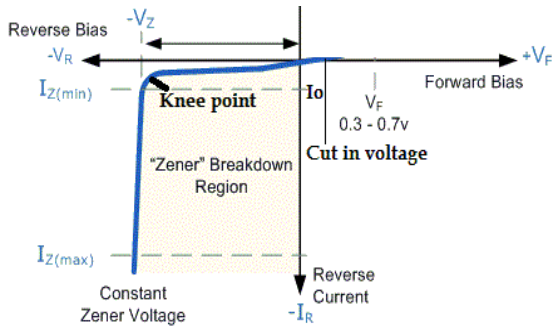

b)	**State type of feedback used for oscillator circuit. Explain Barkhausen criteria.**

Ans: **Type of feedback used for oscillator circuit :** Positive feedback **(1 Mark)**

Barkhausen's criterion is a necessary condition for oscillation: **(3 Marks)**

It states that if A is the gain of the amplifying element in the circuit and $\beta(j\omega)$ is the transfer function of the feedback path, so βA is the loop gain around the feedback loop of the circuit, the circuit will sustain steady-state oscillations only at frequencies for which:

1. The loop gain is equal to unity in absolute magnitude, that is, $|\beta A| = 1$ and
2. The phase shift around the loop is zero or an integer multiple of 2π.

c) State condition for both junction to operate BJT in cut off state, Active state and saturation state.

Ans: **(4 Marks)**

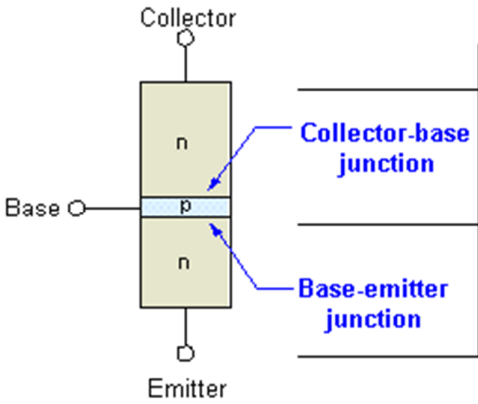

	Cutoff	Active	Saturation
Collector-base junction	Reverse	Reverse	Forward
Base-emitter junction	Reverse	Forward	Forward

d) Name the type of rectifier for each of following feature : (i) Highest rectifier efficiency (ii) Highest form factor (iii) Two diode rectifier circuit (iv) PIV = 2Vm.

Ans: **(4 Marks)**

(i) **Highest rectifier efficiency** : Center tapped & Bridge full wave Rectifier

(ii) **Highest form factor** : Center tapped & Bridge full wave Rectifier

(iii) **Two diode rectifier circuit** : Center tapped full wave Rectifier

(iv) **PIV = 2Vm** : Center tapped full wave Rectifier

Q.4 A) Attempt any THREE of the following : 12 Marks

a) Sketch circuit diagram of Hartely oscillator. State expression for frequency of oscillation

Ans: **Circuit Diagram** **(3 Marks)**

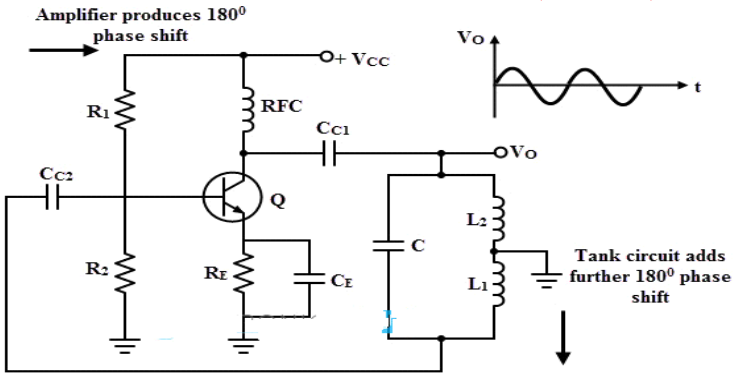

Expression for frequency of oscillation: **(1 Mark)**

$$f = \frac{1}{2\pi\sqrt{L_T C}}$$

where: $L_T = L_1 + L_2 + 2M$

b) **Sketch circuit diagram of bridge rectifier with LC filter. State function of each component.**

Ans: **Circuit diagram :** **(2 Marks)**

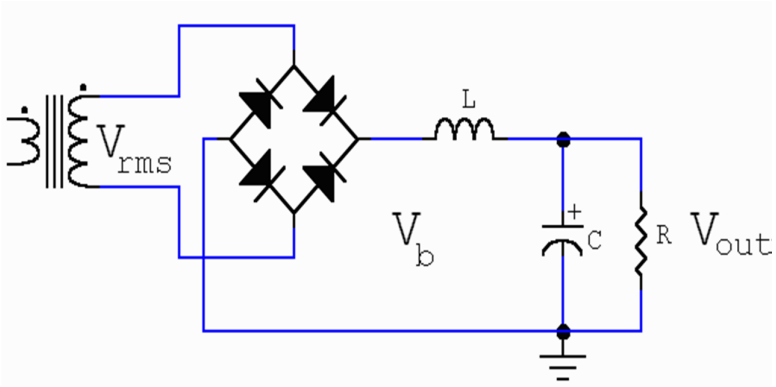

Components and its function: : **(2 Marks)**

1. Transformer- An electrical device which transfers electrical energy from one electric circuit to other, without changing the frequency. The energy transfer takes place with change in voltage and current.
2. Rectifier- Convert AC into pulsating DC.
3. Inductor- Blocks AC components of rectified output and only pass DC components.
4. Capacitor- It bypasses AC components if any and gives DC to load.

c) **In a common base configuration, the emitter current is 1 mA. If the emitter circuit is open, the collector current is 50 microA. Find total collector current. Assume a (Alpha) = 0.92.**

Ans: **Given Data :** $I_E = 1mA$

$I_{CBO} = 50\ \mu A$, $\alpha = 0.92$

Using Equation: **(4 Marks)**

$I_C = \alpha\ I_E + I_{CBO}$

$I_C = (0.92 \times 1mA) + 0.05\ mA.$

$I_C = 0.97\ mA.$

d)	**Sketch and label V-I characteristics of P-N junction diode. Write steps to calculate dynamic forward bias resistance.**
Ans:	**V-I characteristics of P-N junction diode :** **(2 Marks)**

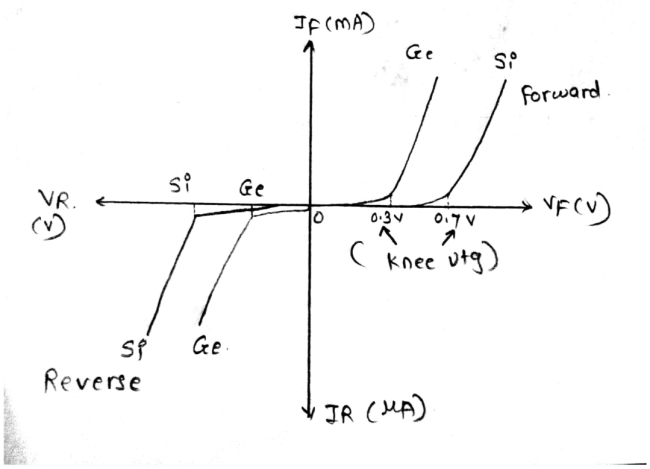

Dynamic forward bias resistance:- **(2 Marks)**

Dynamic resistance is defined as the ratio of change in voltage to the change in current. It is denoted as r_f.

$$rf = \frac{\text{Change in voltage}}{\text{Change in current}}$$

e)	**Explain operation of series inductor filter and find out its ripple factor.**
Ans:	**Circuit diagram of series inductor filter :** **(2 Marks)**

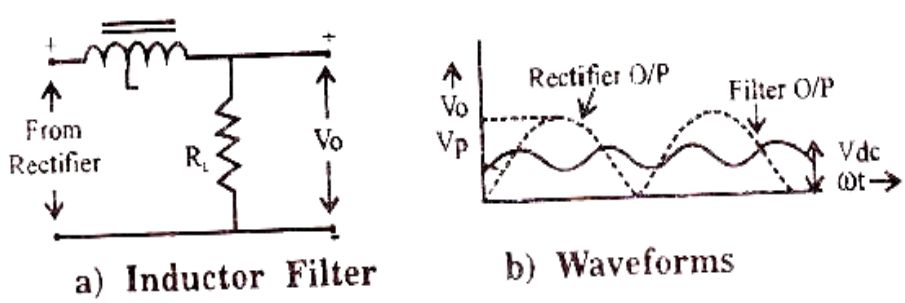

Operation of Series Inductor Filter : **(1 Mark)**

A high value of inductor is connected in series with load. Then the combination is connected across the rectifier. The Inductive reactance is directly proportional to

	frequency. Therefore for AC contents inductor offers high opposition, and hence block the AC signals. For DC signal, freq.is zero .X_L=0.i.e.inductor acts as a short ckt. Thus all DC signals from rectifier are given to load. Applying KVL to the series inductor ckt. $V_0=V_R - I^* X_L$ For DC input F=0 and X_L=0.Therefore $V_0=V_R$. Thus DC components reach to load. For AC input Freq.is high, X_L is high, $I^* X_L$ drop is high, therefore V_0 is small as compared to V_R. Inductor opposes change in current through it. So, current waveform is made smooth. This filter operates properly and effectively for higher values of currents. Hence increase in current reduces ripple factor. Ripple Factor:- $RF = \frac{R}{3\sqrt{2}\omega L}$ **(1 Mark)**
Q.5	**Attempt any TWO of the following : 12 Marks**
(a)	**A transistor is connected in common emitter (CE) configuration with collector supply Vcc of 8V. Voltage drop across resistance RC connected in series with collector is 0.5 V. The value of RC is 800 ohm. If alpha (α) equal to 0.96, calculate : (i) Collector-emitter voltage (ii) Collector current (iii) Base current**
Ans:	**Given data** : Vcc = 8V Rc = 800 Ω α= 0.96 V_{RC} = 0.5 V. By using Equations **(i) Collector-emitter voltage :** **(2 Marks)** $V_{CE} = V_{CC} - I_C R_C$ $V_{CE} = 8 - 0.5 = 7.5$ V **(ii) Collector current :** **(2 Marks)** $I_C = \frac{V_{CC} - V_{CE}}{R_C}$ $= 0.625\ mA$ **(iii) Base current :** **(2 Marks)** $I_B = \frac{I_C(1-\alpha)}{\alpha}$ = 26.04 µA

b)	**Sketch pin configuration of IC 723. State functions of each pin. Sketch circuit diagram for obtaining 6V output d.c. regulated voltage using IC 723.**
Ans:	**(Configuration : 2 Mark, Function : 2 Marks & Diagram : 2 Marks)** **1) Pin configuration of IC 723 :** **(2 Mark)** 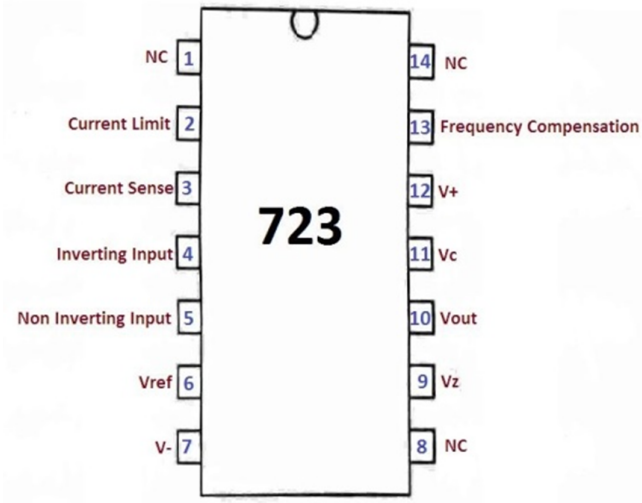 **2) Functions of each pin**:- **(2 Marks)** **V+ and V-:** These are the supply voltage terminals of the IC. V+ is the positive terminal and V- is the negative terminal. **Non Inverting Input:** This is the non-inverting input of the error amplifier whose output is connected to the series pass transistor. Reference voltage or a portion of it is given to the non-inverting input. **Inverting Input:** This is the inverting input of the error amplifier whose output is connected to the series pass transistor. Usually output voltage or a portion of it is given to the inverting input. This makes the output voltage constant. **V_{ref}:** It is the reference voltage output of the IC. It is the output of voltage reference amplifier. Its output voltage is about 7.15V. **V_{out}** : It is the output terminal of the IC. Usually output voltage ranges from 2 to 37V. This pin can provide up to 150mA current. **Current Limit:** It is the base input of the current limiter transistor. This pin is used for current limiting or current fold back applications. **Current Sense:** This is the emitter of current limiting transistor. This terminal is used with current limiting and current fold-back applications.

Vc : This is the collector input of the series pass transistor. It is usually directly connected to the positive supply voltage if an external transistor is not used.

Freq. Comp: Frequency Compensation : This pin is used to connect a capacitor which bypasses high frequency noises. It is the output of error amplifier. The capacitor is connected between this pin and inverting input of the error amplifier. The prescribed value of this capacitor varies for different types of regulators.

Current Sense: This is the emitter of current limiting transistor. This terminal is used with current limiting and current fold-back applications.

Vc: This is the collector input of the series pass transistor. It is usually directly connected to the positive supply voltage if an external transistor is not used.

Freq. Comp: Frequency Compensation: This pin is used to connect a capacitor which bypasses high frequency noises. It is the output of error amplifier. The capacitor is connected between this pin and inverting input of the error amplifier. The prescribed value of this capacitor varies for different types of regulators.

Vz: It is the anode of the zener diode whose cathode connected to the output terminal. It is usually used for making negative regulators.

3) Circuit diagram for obtaining 6V output d.c. regulated voltage using IC 723 **(2 Marks)**

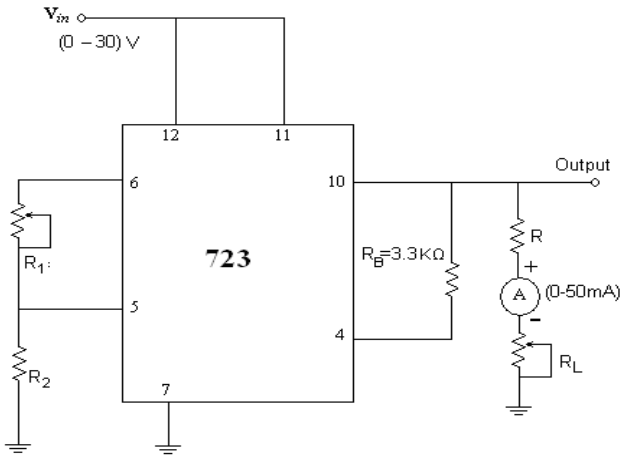

Expression $V_{out} = V_{ref} * (R_2 / R_1+R_2)$

Assume any value of R_2, R_1 can be calculated.

c)	**Implement the fundamental logic gates 'OR gate', 'AND gate', 'NOT gate' using only NAND gates.**
Ans:	**Fundamental logic gates 'OR gate', 'AND gate', 'NOT gate' using only NAND gates:** **(6 Marks)** 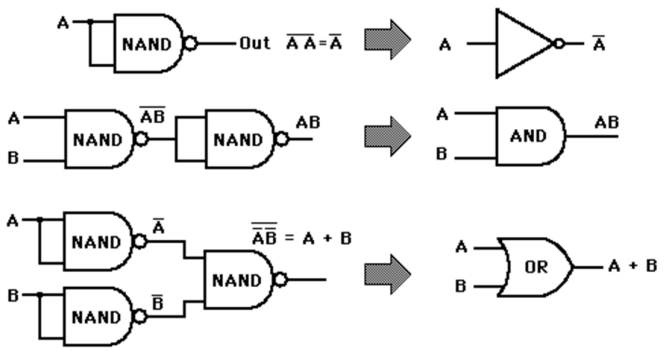
Q.6	**Attempt any TWO of the following :** **12 Marks**
a)	**Sketch circuit diagram of RC phase shift oscillator. If value of capacitor C = C_1 = C_2 = C_3 = 5 pF and frequency of oscillation is 800 Hz, calculate value of resistor R, (R = R_1 = R_2 = R_3).**
Ans:	**Circuit diagram of RC phase shift oscillator** **(3 Marks)** 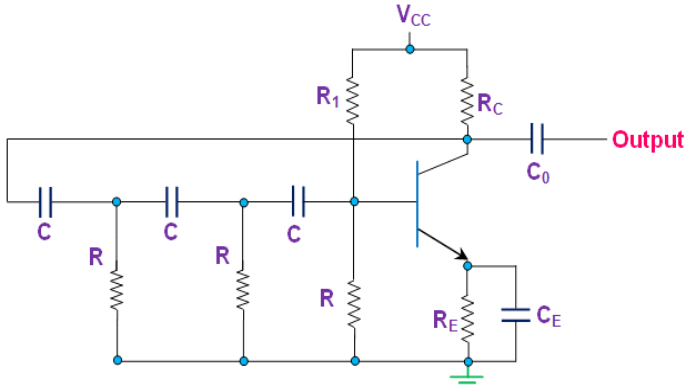 or equivalent circuits **Given data :** fo= 800 Hz and C = 5 pF Using Expression for frequency of oscillation $$f_o = \frac{1}{2\pi(\sqrt{6})CR}$$ **(1 Marks)**

	Putting values in above equation **R = 16.24 MΩ** **(2 Marks)**
b)	**For common emitter configuration sketch input Characteristics for two different values of V_{CE} and output characteristics for two different values of I_B. Write formula for input resistance and output resistance.**
Ans:	**(Input characteristics 2 Marks & Output characteristics 2 Marks)** **Input characteristics** **Output characteristics** 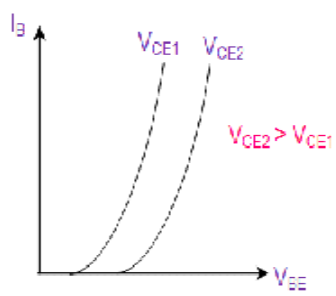 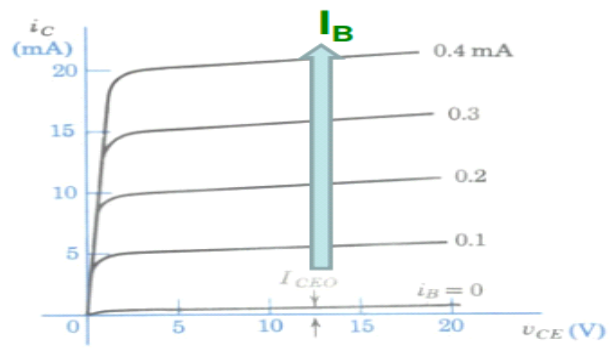 $r_i = \frac{\Delta V_{BE}}{\Delta I_B}$ **…..for V_{CE} = constant** **(1 Mark)** $r_o = \frac{\Delta V_{CE}}{\Delta I_C}$ **…..for I_B = constant** **(1 Mark)**
c)	**Perform following number system conversion :** **(i) $(589)_{10}$ = ( )$_2$** **(ii) $(101101)_2$ = ( )$_{16}$** **(iii) $(413)_8$ = ( )$_2$** **(iv) $(5AF)_{16}$ = ( )$_{10}$** **(v) $(AC8)_{16}$ = ( )$_2$** **(vi) $(106)_8$ = ( )$_{10}$**
Ans:	**(1 Mark for each)** **(i) $(589)_{10}$** = $(1001001101)_2$ **(ii) $(101101)_2$** = (2D)$_{16}$ **(iii) $(413)_8$** = $(100001011)_2$ **(iv) $(5AF)_{16}$** = $(1455)_{10}$ **(v) $(AC8)_{16}$** = $(101011001000)_2$ **(vi) $(106)_8$** = $(70)_{10}$

---------- END----------

22213

11819

3 Hours / 70 Marks Seat No. | | | | | | | | |

Instructions : (1) All Questions are *compulsory.*

(2) Illustrate your answers with neat sketches wherever necessary.

(3) Figures to the right indicate full marks.

(4) Assume suitable data, if necessary.

(5) Use of Non-programmable Electronic Pocket Calculator is permissible.

Marks

1. Attempt any FIVE of the following : **10**

(a) Draw the symbol of LED & photodiode.

(b) Define rectifier and list its types.

(c) List configurations of BJT.

(d) State the output voltage for IC 7824 and IC 7906.

(e) Suggest the suitable diode type for rectifier circuit.

(f) Define the term line regulation.

(g) Draw the symbol, logic expression and truth table of NOR gate.

2. Attempt any THREE of the following : **12**

(a) Draw experimental circuit diagram and characteristics for forward biased P-N junction diode.

(b) Explain Center-tapped full wave rectifier with the help of circuit diagram and draw input-output waveforms.

(c) Describe the operation of NPN transistor with neat diagram.

(d) Draw block diagram of IC 723. Write the functions of IC 723.

3. Attempt any THREE of the following : 12

(a) Draw the block diagram of regulated DC power supply and explain the function of each block.

(b) Differentiate between positive and negative feedback on the basis of :

(i) overall phase shift (ii) voltage gain

(iii) stability (iv) applications

(c) Describe transistor as a switch with neat sketch.

(d) An AC supply of 230 V is applied to half wave rectifier circuit. A transformer turns ratio is 20 : 1. Find

(i) Output DC voltage (ii) Peak Inverse Voltage (PIV)

4. Attempt any THREE of the following : 12

(a) List the applications of RC oscillator and crystal oscillator. (two each)

(b) Draw the circuit diagram of bridge rectifier with π filter. Draw its input and output waveform.

(c) In a common base connection, current amplification factor (α) is 0.9. If the emitter current is 1 mA, determine the value of base current.

(d) Describe the working principle of photodiode with proper diagram.

(e) In a full wave rectifier V_m = 10 V, R_L = 10 kΩ. Find out V_{dc}, I_{dc} and Ripple factor. [Refer Fig. 1)

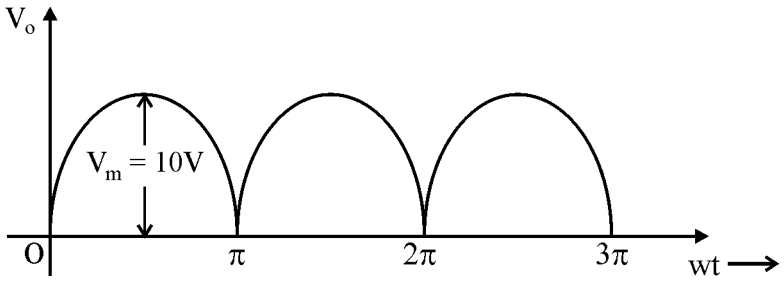

Fig. 1

5. Attempt any TWO of the following : **12**

(a) Identify type of BJT configuration having following features :

(i) BJT configuration having the least current gain.

(ii) BJT configuration called as voltage follower.

(iii) BJT configuration having current gain less than one.

(iv) BJT configuration suitable for impedance matching.

(v) BJT configuration suitable for voltage amplification.

(vi) BJT configuration having the least output impedance.

(b) Find out the input voltage of the zener regulator shown in Fig. 2. Assume $R_S = 200\ \Omega$ and $I_z(max) = 25$ mA.

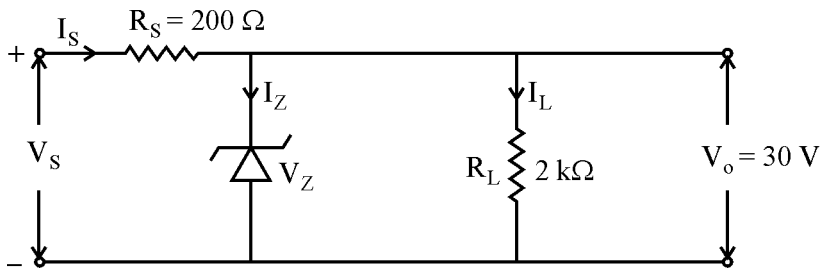

Fig. 2

(c) Convert the following numbers :

(i) $(456)_{10} = (\quad)_2$

(ii) $(5A)_{16} = (\quad)_{10}$

(iii) $(43)_8 = (\quad)_2$

(iv) $(101011)_2 = (\quad)_{16}$

(v) $(204)_{10} = (\quad)_8$

(vi) $(259)_{10} = (\quad)_{16}$

6. Attempt any TWO of the following : **12**

(a) Identify the circuit shown in Fig. 3. Find out frequency of oscillator of the circuit.

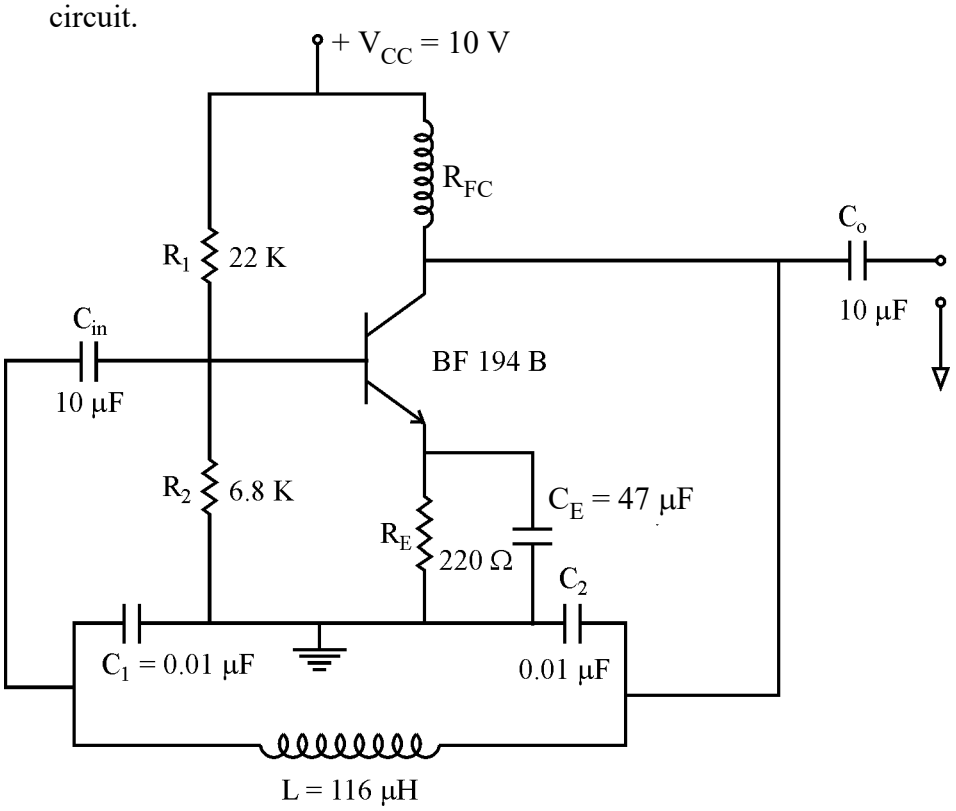

Fig. 3

(b) Draw output characteristics of common emitter [CE] configuration and explain active, saturation and cut-off regions in detail.

(c) Refer the diagram shown in Fig. 4. What should be logic level at D input to make :

(i) LED ON

(ii) LED OFF

(iii) Justify your answer by giving step-by-step output of each stage.

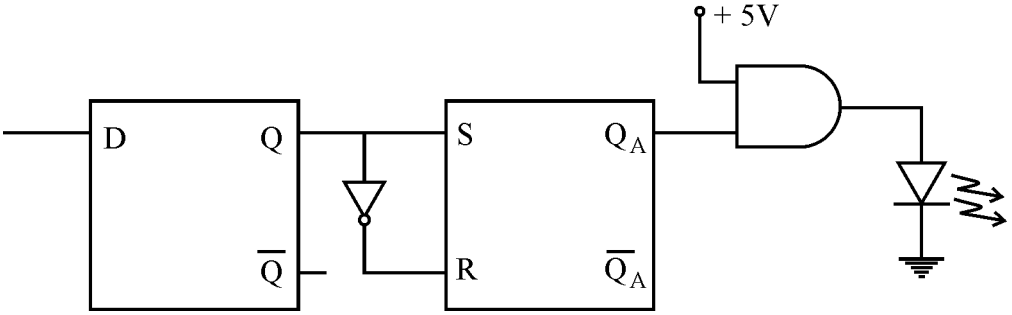

Fig. 4

Important suggestions to examiners:

1) The answers should be examined by key words and not as word-to-word as given in the model answer scheme.
2) The model answer and the answer written by candidate may vary but the examiner may try to assess the understanding level of the candidate.
3) The language errors such as grammatical, spelling errors should not be given more importance. (Not applicable for subject English and communication skills)
4) While assessing figures, examiner may give credit for principle components indicated in a figure. The figures drawn by candidate and model answer may vary. The examiner may give credit for any equivalent figure drawn.
5) Credits may be given step wise for numerical problems. In some cases, the assumed constant values may vary and there may be some difference in the candidate's answers and model answer.
6) In case some questions credit may be given by judgment on part of examiner of relevant answer based on candidate understands.
7) For programming language papers, credit may be given to any other program based on equivalent concept.

Q.1	**Attempt any FIVE of the following :**	**10 Marks**
a)	**Draw the symbol of LED & photodiode.**	
Ans	**Symbol of LED :** 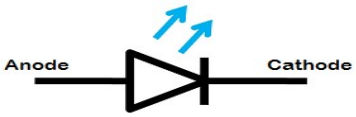 **Symbol of photodiode :** 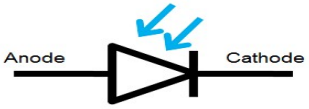	**(2 Marks)**
b)	**Define rectifier and list its types.**	
Ans	**Definition:** A rectifier is a circuit that converts AC input voltage into DC output voltage.	**(1 Mark)**
	Types : 1) Half wave rectifier 2) Center tap full wave rectifier. 3) Bridge Rectifier	**(1 Mark)**
c)	**List configurations of BJT.**	
Ans	**Configurations of BJT :** 1) Common Base (CB) configuration 2) Common Emitter (CE) configuration 3) Common Collector (CC) configuration	**(2 Marks)**
d)	**State the output voltage for IC 7824 and IC 7906.**	
Ans	**i) Output voltage for IC 7824 :** + 24 V	**(1 Mark)**
	ii) Output voltage for IC 7906 : - 6 V	**(1 Mark)**
e)	**Suggest the suitable diode type for rectifier circuit.**	
Ans	Any general purpose diodes 1N4001 to 1N4007 series **OR** Silicon diode & Germanium diode	**(2 Marks)**

f)	**Define the term line regulation.**
Ans	**Line Regulation** : **(2 Marks)** Line regulation is the ability of a power supply to maintain a constant output voltage irrespective of any changes in input voltage.
g)	**Draw the symbol, logic expression and truth table of NOR gate.**
Ans	**The Symbol, logic expression and truth table of NOR gate:** **(2 Marks)** NOR Gate 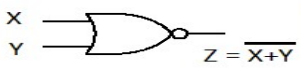 TRUTH TABLE INPUTS: X, Y; OUTPUT: Z 0 0 1 0 1 0 1 0 0 1 1 0
Q.2	**Attempt any THREE of the following :** **12 Marks**
a)	**Draw experimental circuit diagram and characteristics for forward biased P-N junction diode.**
Ans:	**Experimental circuit diagram:** **(2 Marks)** 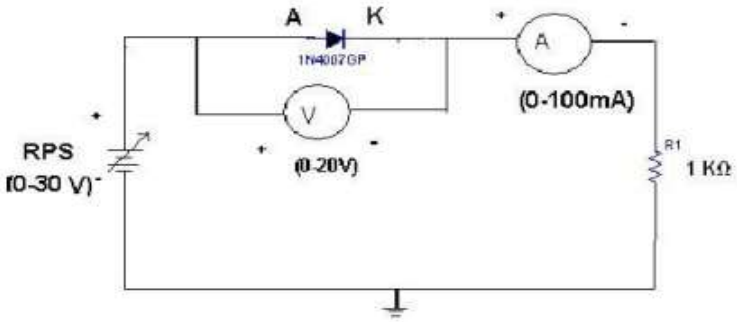 **or equivalent figure** **Forward biased P-N junction diode :** **(2 Marks)** 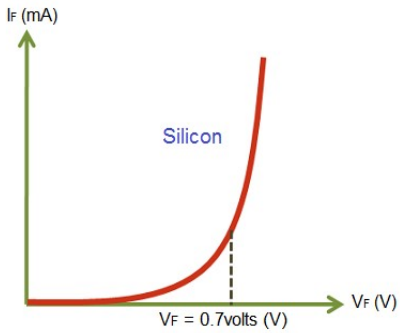 **or equivalent figure**

b)	**Explain Center-tapped full wave rectifier with the help of circuit diagram and draw input-output waveforms.**
Ans:	**Diagram of Bridge rectifier:** **(Diagram: 2 Mark & Explanation : 2 Mark)** 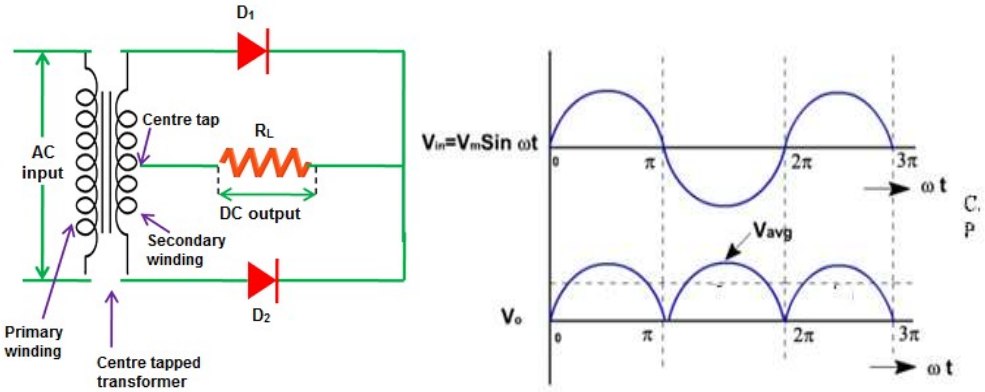 **or equivalent diagram** **Operation :** During positive half cycle of an AC supply, D1 will forward biased and current starts flowing through load. The output voltage is equal to +Vs. During negative half cycle of an AC supply, D2 will forward biased and current starts flowing through load. The output voltage is equal to +Vs. In this pulsating DC waveform will be obtained at the load.
c)	**Describe the operation of NPN transistor with neat diagram.**
Ans:	**Operation of NPN transistor-** **(Diagram 2-Marks, Explanation 2-Marks)** 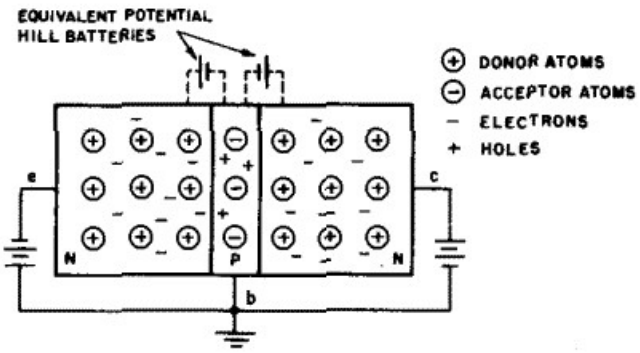 **or equivalent figure** N-p-n transistor is made by sandwiching thin layer of p-type semiconductor between two layers of n-type semiconductor. It has three terminals - Emitter, Base and collector. The npn transistor has two supplies, one is connected through the emitter base and one through the collector base. The supply is connected such that emitter-base are forward biased and collector base are reverse biased. It means, Base has to be more positive than the emitter and in turn, the collector must be

more positive than the base. The current flow in this type of transistor is carried through movement of electrons. Emitter emits electrons which are pulled by the base as it is more positive. This end up in the collector as it is more positive. In this way, current flows in the transistor.

d) Draw block diagram of IC 723. Write the functions of IC 723.

Ans: **Block diagram of IC 723 :** **(2 Marks)**

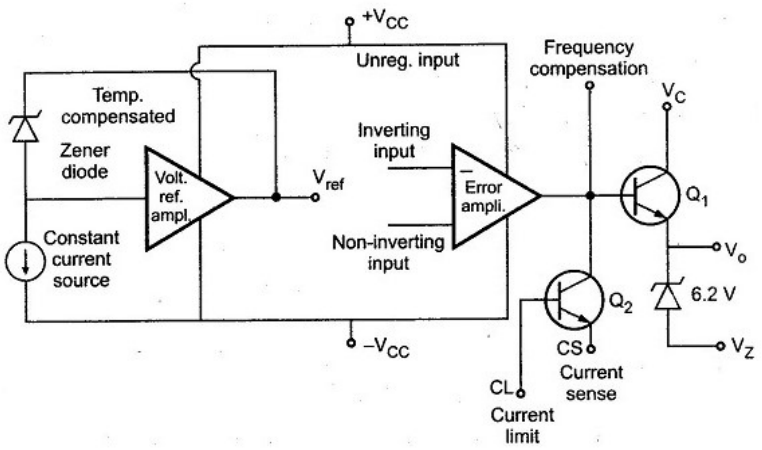

or equivalent figure

Functions of IC 723 : **(2 Marks)**

1. Series, shunt, switching and floating regulators
2. Basic Low-voltage Regulator (Vo = 2 to 37 volts)
3. Low Voltage High Current Regulator.

OR

Block diagram explanation :

Temperature compensated zener diode, constant current source and reference amplifier constitutes the reference element. In order to get a fixed voltage from zener diode, the constant current source forces the zener to operate at a fixed point.

Output voltage is compared with this temperature compensated reference potential of the order of 7 volts. Error amplifier is high gain differential amplifier. It's inverting input is connected to the either whole regulated output voltage or part of that from outside. For later case a potential divider of two scaling resistors is used. Scaling resistors help in getting multiplied reference voltage or scaled up reference voltage.

Error amplifier controls the series pass transistor Q1, which acts as variable resistor. The series pass transistor is a small power transistor having about 800 mW dissipation. The unregulated power supply source (< 36V d.c.) is connected to collector of series pass transistor.

Transistor Q2 acts as current limiter in case of short circuit condition. It senses drop across lc placed in series with regulated output voltage externally.

The frequency compensation terminal controls the frequency response of the error amplifier. The required roll-off is obtained by connecting a small capacitor of 100 pF between frequency compensation and inverting input terminals.

Q.3 Attempt any THREE of the following : 12 Marks

a) Draw the block diagram of regulated DC power supply and explain the function of each block.

Ans: **Diagram :** **(2 Mark)**

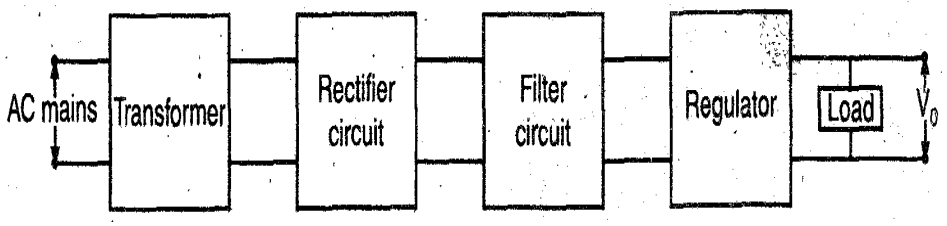

or equivalent figure

Functions of each block: **(2 Mark)**

1) Transformer:

It Converts an AC input source to AC required output without changing frequency. The transformer is step up or step down transformer.

2) Rectifier:

It is a circuit which is used to convert AC into pulsating DC. A rectifying diode is used.

3) Filter:

It is a circuit used to convert pulsating DC into pure DC. A inductor and capacitors are used as filter

4) Voltage regulator:

An unregulated DC voltage is converted into regulated DC voltage. IC 78XX & 79XX series are used as regulator.

b) Differentiate between positive and negative feedback on the basis of . (i) overall phase shift (ii) voltage gain (iii) stability (iv) applications

Ans: **(1 Mark each Point)**

S.No.	Parameter	Positive feedback	Negative feedback
i)	overall phase shift	0° or 360° (In phase)	180° out of phase
ii)	voltage gain	Increases	Decreases
iii)	stability	Poor	Better
iv)	applications	Oscillator	Amplifier

c)	**Describe transistor as a switch with neat sketch.**
Ans:	**Working :** **(Diagram 2 Marks Explanation 2 Marks)** From the circuit we can see that the control input Vin is given to base through a current limiting resistor Rb and Rc is the collector resistor which limits the current through the transistor 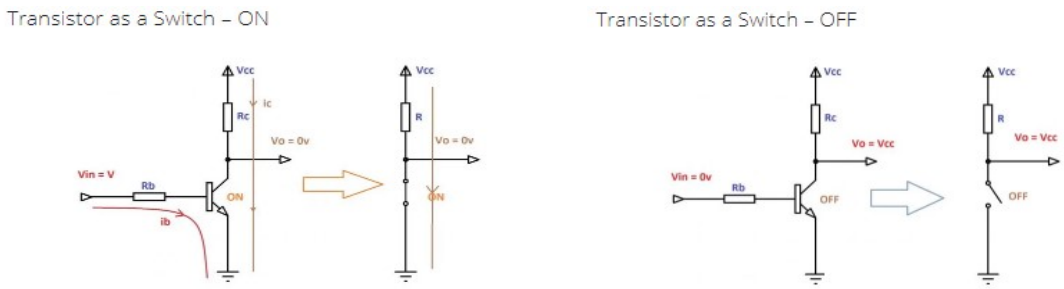 **or equivalent figure** When a sufficient voltage V is given to input, transistor becomes ON & it goes into saturation. During this condition the Collector Emitter voltage Vce will be approximately equal to zero, ie the transistor acts as a short circuit & Vo = 0. When input voltage V=0, transistor becomes OFF & it goes into cutoff. The transistor acts as an open circuit. During this condition the Collector Emitter voltage Vce=Vcc. Therefore Vo = Vcc.
d)	**An AC supply of 230 V is applied to half wave rectifier circuit. A transformer turns ratio is 20 : 1. Find i) Output DC voltage (ii) Peak Inverse Voltage (PIV)**
Ans:	Given Data : V primary = 230Vrms. Turns ratio = 20:1 V secondary = V primary/ 20 = 230/20 = 11.5 Vrms **(1 Mark)** $Vm = \sqrt{2} \times Vrms = \sqrt{2} \times 11.5 = 16.26$ V **(1 Mark)** i) **Output DC voltage** = Vm/π = 16.26/3.14= 5.17 V **(1 Mark)** ii) **Peak Inverse Voltage (PIV) =Vm =** 16.26 V **(1 Mark)**

Q.4	Attempt any THREE of the following : 12 Marks
a)	**List the applications of RC oscillator and crystal oscillator. (two each)**
Ans:	**Applications of RC oscillator :** **(Any two 2 Marks)** 1) In AF signal generators 2) In radio transmitter & Receivers 3) Sine wave generator. **Applications of Crystal oscillator** **(Any two 2 Marks)** 1) Electronic navigation systems 2) Frequency Synthesizers 3) Timing circuits (Clock) with high stability. 4) RADAR systems.
b)	**Draw the circuit diagram of bridge rectifier with π filter. Draw its input and output waveform.**
Ans:	**Circuit diagram of bridge rectifier with π filter :** **(2 Marks)** 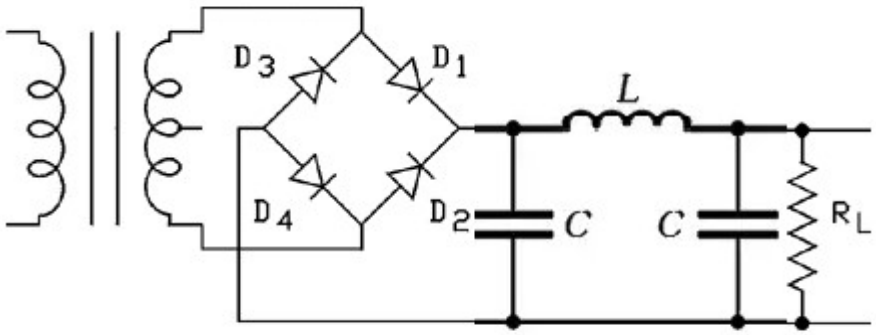 **or equivalent figure** **Input and output waveform:** **(2 Marks)** 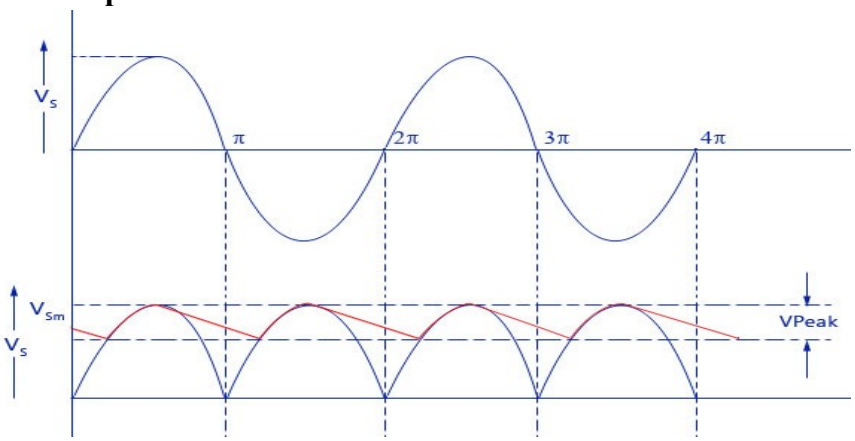 **or equivalent figure**

c)	**In a common base connection, current amplification factor (a) is 0.9. If the emitter current is 1 mA, determine the value of base current.**
Ans:	Given data : $\alpha = 0.9$ **(Equation 2 Marks & Answer 2 Marks)** $I_E = 1mA$ As $\alpha = I_C / I_E$. Therefore $I_C = 0.9mA$ $I_E = I_C + I_B$ ……(Assume $I_{CBO} = 0$) $I_B = 0.1mA$ **OR** $I_B = (1 - \alpha) I_E$ $I_B = 0.1mA$
d)	**Describe the working principle of photodiode with proper diagram.**
Ans:	**Diagram of photo diode :** **(2 Mark)** 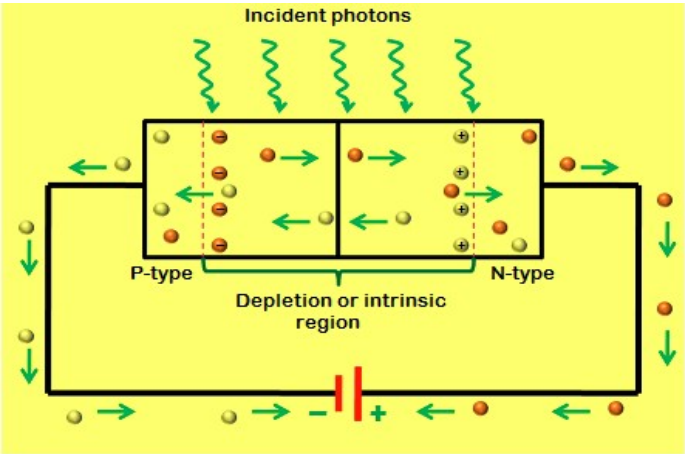 **or equivalent figure** **Working principle of photo diode :** **(2 Marks)** When photons of energy greater than 1.1 eV hit the diode, electron-hole pairs are created. The intensity of photon absorption depends on the energy of photons – the lower the energy of photons, the deeper the absorption is. This process is known as the inner photoelectric effect. If the absorption occurs in the depletion region of the p-n junction, these electron hole pairs are swept from the junction - due to the built-in electric field of the depletion region. As a result, the holes move toward the anode and the electrons move toward the cathode, thereby producing photocurrent.

e)	**In a full wave rectifier V = 10 V, Ri = 10 kf2. Find out Vdc, fide and Ripple factor. [Refer Fig. 1)** 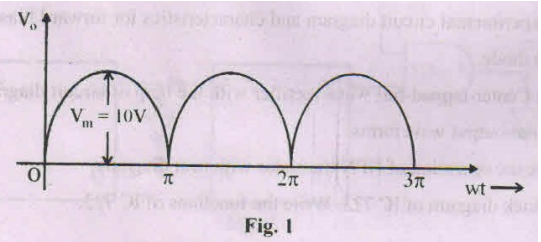 Fig. 1
Ans:	Given Data : Vm= 10V , R_L= 10K V_{DC} = 2Vm/π = 6.367 V **(1 Mark)** I_{DC} = V_{DC}/R_L = 0.637 mA **(1 Mark)** Im = Vm/ R_L = 1mA **(1 Mark)** Ripple Factor = $\sqrt{[\frac{I_{RMS}}{I_{DC}}]^2 - 1}$ =0.48 **(1 Mark)**
Q.5	**Attempt any TWO of the following : 12 Marks**
(a)	**Identify type of BJT configuration having following features :** **(i) BJT configuration having the least current gain.** **(ii) KIT configuration called as voltage follower.** **(iii) BJT configuration having current gain less than one.** **(iv) BJT configuration suitable for impedance matching.** **(v) BIT configuration suitable for voltage amplification.** **(vi) BJT configuration having the least output impedance.**
Ans:	**(Each 1 Mark)** (i) BJT configuration having the least current gain : **Common Base Configuration** (ii) KIT configuration called as voltage follower: **Common Collector Configuration** (iii) BJT configuration having current gain less than one : **Common Base Configuration** (iv) BJT configuration suitable for impedance matching: **Common Collector Configuration** (v) BIT configuration suitable for voltage amplification: **Common Emitter Configuration** (vi) BJT configuration having the least output impedance: **Common Collector Configuration**

b)	**Find out the input voltage of the zener regulator shown in Fig. 2. Assume Rs = 200 Ω and 1_Z (max) = 25 mA.** 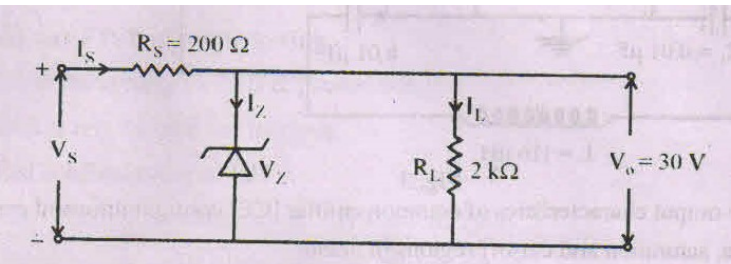 Fig. 2
Ans:	Given Rs = 200 ohm, R_L = 2Kohm , Iz(max) = 25mA Vo = 30V So Vz = Vo = 30V. **(1 Mark)** **The input voltage range** A) Vs.max = I_{Rmax} × R + Vz ……(1) **(1 Mark)** I_{Rmax} = $I_{Z\,max}$ + I_L = I_{Zmax} + Vz/R_L = 40 mA. **(1 Mark)** Therefore from equation (1) Vs.max = 38 V **(1 Mark)** B) Assuming Iz min = 20 % of I z max = 5 mA … Practically to maintain zenner diode in breakdown condition. So , Vs min = Is Rs + Vz …… I s = Iz + I_L = 20 mA = 34 V. **So, Input voltage ranging from 34V to 38V.** **(2 Marks)** Note : Full marks may be given for calculating input **Vsmax =38V**
c)	**Convert the following numbers :** **i) $(456)_{10}$ = ($)_2$** **ii) $(5A)_{16}$ = ($)_{10}$** **iii) (43) = ($)_2$** **vi) $(101011)_2$ = ($)_{16}$** **v) $(204)_{10}$ = ($)_8$** **vi) $(259)_{10}$ = ($)_{16}$**
Ans:	**Convert the following numbers :** **(1 Mark each convert Number)** i) $(456)_{10} = (111001000)_2$ ii) $(5A)_{16} = (90)_{10}$ iii) $(43)_{10} = (101011)_2$ iv) $(101011)_2 = (28)_{16}$, v) $(204)_{10} = (314)_8$, vi) $(259)_{10} = (103)_{16}$

Q.6	Attempt any TWO of the following : 12 Marks
a)	**Identify the circuit shown in Fig. 3. Find out frequency of oscillator of the circuit.** 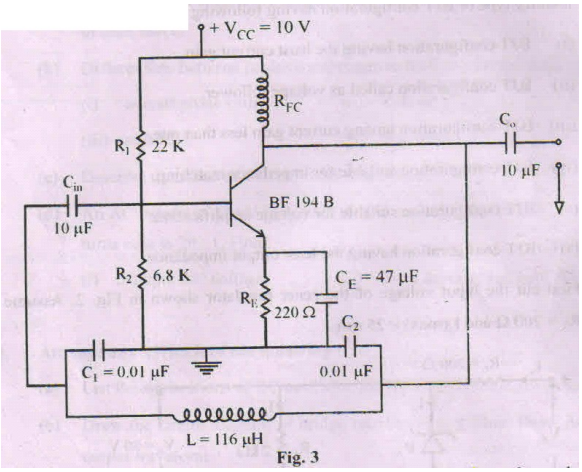 Fig. 3
Ans:	**Circuit Diagram : Colpitts Oscillator** **(2 Marks)** **Frequency** = $\frac{1}{2\pi\sqrt{LC_{eq}}}$ where $C_{eq} = \frac{C_1 C_2}{C_1 + C_2}$ **(2 Marks)** So $C_{eq} = 5nF$ & $f = 208.95$ KHz. **(2 Marks)**
b)	**Draw output characteristics of common emitter [CE] configuration and explain active, saturation and cut-off regions in detail.**
Ans:	**Characteristics of common emitter [CE] configuration** **(3 Marks)** 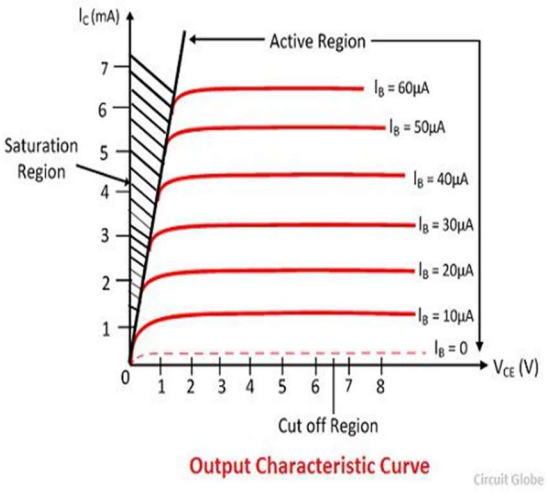 **or equivalent figure**

Explanation : **(3 Marks)**

(1) Active Region:

In this region collector junction is reverse biased and emitter junction is forward biased. It is the area to the right of VCE = 0.5 V and above IB= 0. In this region transistor current responds most sensitively to IB. If transistor is to be used as an amplifier, it must operate in this region.

(2) Cut Off:

In this region collector junction is reverse biased and emitter junction is reverse biased Cut off in a transistor is given by IB = 0, IC= ICO.

(3) **Saturation Region**:

In this region both junctions are forward biased. Since the voltage VBE and VBC across a forward is approximately 0.7 V therefore, VCE = VCB + VBE = - VBC + VBE is also few tenths of volts. In this region the transistor collector current is approximately given by VCC / RC and independent of base current.

c) **Refer the diagram shown in Fig. 4. What should be logic level at D input to make :**
(i) LED ON (ii) LED OFF (iii) Justify your answer by giving step-by-step output of each stage. o+ 5V

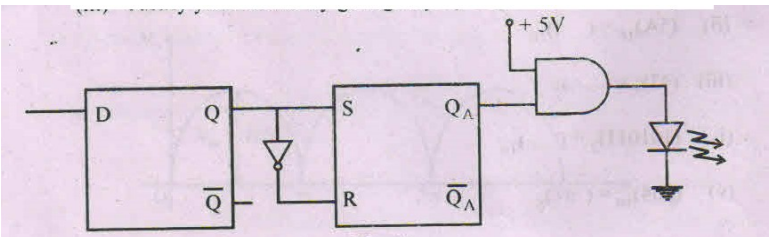

Fig. 4

Ans: **D Flip Flop Truth Table:**

clk	D	Q	$\overline{Q}$
0	0	Q	$\overline{Q}$
0	1	Q	$\overline{Q}$
1	0	0	1
1	1	1	0

SR Flip Flop Truth Table:

S	R	Q	State
0	0	Previous State	No change
0	1	0	Reset
1	0	1	Set
1	1	?	Forbidden

Looking at the truth table and given circuit diagram to get logic level at D input for following output :

	i) **LED ON**: This indicates output of SR FF $Q_A = 1$. To get $Q_A = 1$, S =1. So, Q=1. To get Q=1, D=1. **Therefore D = 1 for LED ON condition** **(3 Marks)** ii) **LED OFF**: This indicates output of SR FF $Q_A = 0$. To get $Q_A = 0$, S =0. So, Q=0. To get Q=0, D=0. **Therefore D = 0 for LED OFF condition** **(3 Marks)**

---------- END----------

22213

21819

3 Hours / 70 Marks Seat No. | | | | | | | | |

Instructions – (1) All Questions are *Compulsory.*

(2) Answer each next main Question on a new page.

(3) Illustrate your answers with neat sketches wherever necessary.

(4) Figures to the right indicate full marks.

(5) Use of Non-programmable Electronic Pocket Calculator is permissible.

(6) Mobile Phone, Pager and any other Electronic Communication devices are not permissible in Examination Hall.

Marks

1. Attempt any FIVE of the following: **10**

a) Draw symbol of:

(i) PN junction diode

(ii) LED

b) Name the different types of filter.

c) Define current gain of a transistor.

d) Define load and line regulation.

e) List any two applications of zener diode.

f) Draw pin configuration of IC 723.

g) Define Demorgans theorem first and write it's equation.

Marks

2. Attempt any THREE of the following: 12

a) Describe the operating principle of Light Emitting Diode (LED) with neat diagram.

b) Draw the circuit diagram of full wave bridge rectifier and describe its working.

c) Describe the working of NPN transistor with a neat sketch.

d) Draw the block diagram of regulated power supply and state the function of each block.

3. Attempt any THREE of the following: 12

a) Draw circuit diagram and describe the working of zener diode as voltage regulator.

b) Draw the circuit diagram of crystal oscillator. Give the basic principle of working of piezoelectric crystal and give the equivalent circuit diagram.

c) Draw the output characteristic of CE (Common Emitter) configuration and label various regions.

d) In full wave bridge rectifier Vm= 10 V RL = 10 kΩ. Find out V_{DC}, I_{DC}, ripple factor and P_{IV}.

4. Attempt any THREE of the following: 12

a) Compare positive and negative feedback (any four points).

b) With the help of circuit diagram and waveform, describe the working of π type filter.

c) For a transistor $\alpha = 0.98$ and IC = 4 mA. Calculate IB and IE.

d) Draw labelled VI characteristic of PN junction diode and explain.

e) Draw the circuit diagram for the following input-output waveform of rectifier (Refer Fig. No. 1 and Fig. No. 2)

Marks

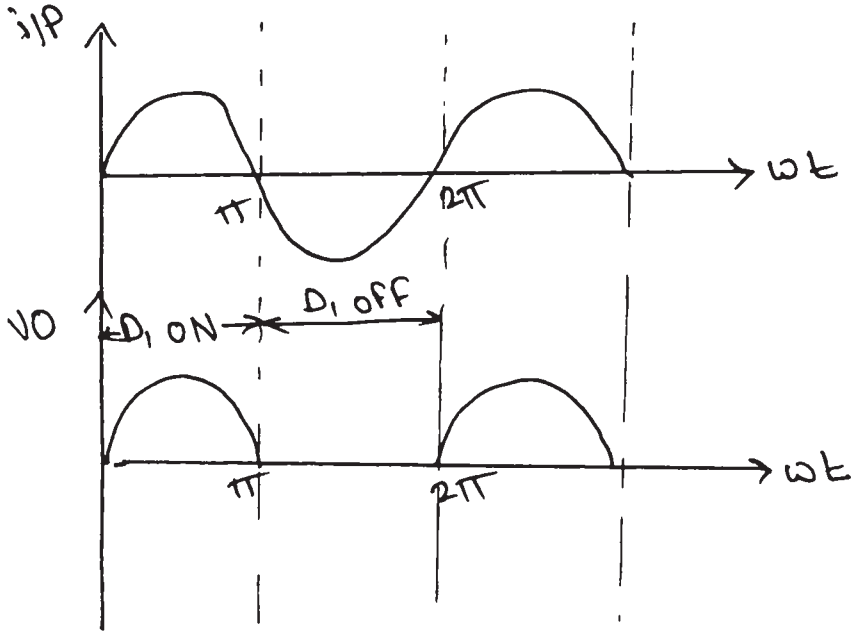

Fig. No. 1

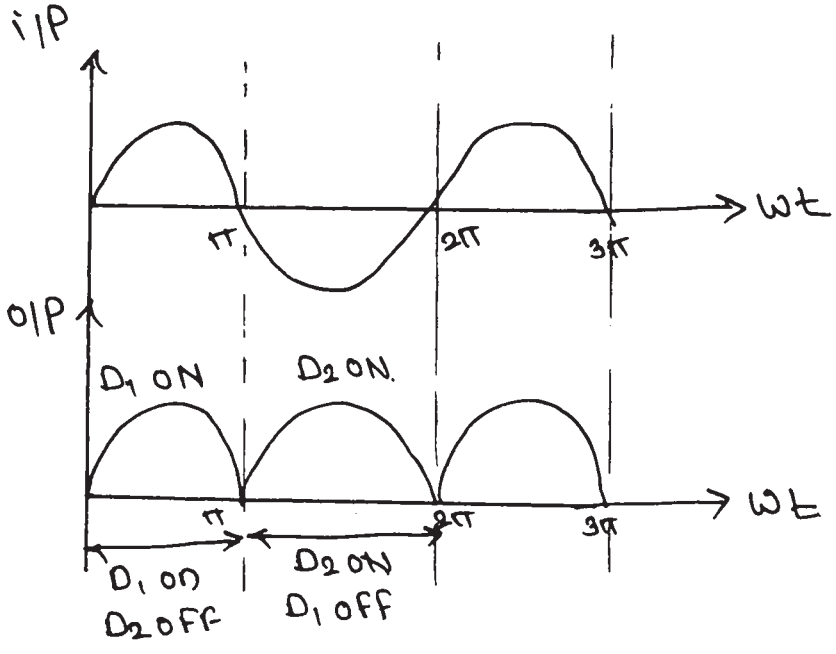

Fig. No. 2

Marks

5. Attempt any TWO of the following: **12**

a) Define α, β and γ of transistor and give the relation between α, β and γ of the transistor.

b) Construct a dual regulated power supply capable of giving ±12 V using 78XX and 79XX IC's.

c) Define universal gate and implement NAND gate as a OR gate and EX-OR gate.

6. Attempt any TWO of the following: **12**

a) Draw RC phase shift oscillator and determine frequency of oscillation? How can the frequency of oscillator be changed.

b) Describe the working of transistor as a switch with a circuit diagram.

c) Convert:

(i) $(1101101)_2 = (\ ?\ )_8$

(ii) $(513)_{10} = (\ ?\ )_2$

(iii) $(125)_{10} = (\ ?\ )_{16}$

22213

11920

3 Hours / 70 Marks Seat No. | | | | | | | | |

Instructions –
(1) All Questions are *Compulsory.*
(2) Answer each next main Question on a new page.
(3) Illustrate your answers with neat sketches wherever necessary.
(4) Figures to the right indicate full marks.
(5) Assume suitable data, if necessary.
(6) Use of Non-programmable Electronic Pocket Calculator is permissible.
(7) Mobile Phone, Pager and any other Electronic Communication devices are not permissible in Examination Hall.

Marks

1. Attempt any FIVE of the following: **10**

a) Draw symbols of zener diode and LED

b) List the types of filters.

c) Draw symbol of NPN and PNP transistor

d) Define the term line regulation and load regulation.

e) Suggest the diode material suitable to rectify 0.5V AC signal.

f) Draw circuit of zener diode as a voltage regulator.

g) Draw truth table for logic gates represented by following IC's:

(i) IC 7400

(ii) IC 7402

Marks

2. Attempt any THREE of the following: 12

a) Draw and explain V-I characteristics of a PN Junction diode.

b) Explain shunt capacitor filter with the help of circuit diagram and waveform.

c) Compare CB, CE, CC configuration of BJT with respect to following points.

(i) Input Impedance

(ii) Output Impedance

(iii) Current gain

(iv) Voltage gain

d) Draw the functional block diagram of IC 723. State any two features of IC 723.

3. Attempt any THREE of the following: 12

a) Draw block diagram of DC regulated power supply and explain function of each block with waveforms.

b) State and explain Barkhausen's criteria required for Oscillations.

c) State the need of biasing of BJT. List types of biasing.

d) A half wave rectifier is used to supply 50V DC to a resistive load of 1KΩ. The diode has a resistance of 10Ω. Calculate required input AC voltage.

4. Attempt any THREE of the following: 12

a) Draw the circuit diagram of crystal oscillator and give the basic principle of piezoelectric crystal.

b) Compare half wave rectifier and full wave rectifier with respect to:

(i) PIV

(ii) Ripple Frequency

(iii) TUF

(iv) Efficiency

Marks

c) In a common base configuration, current amplification factor is 0.8. If emitter current is 2mA, determine the value of base current.

d) Describe the operating principle of LASER diode with constructional diagram.

e) List out advantages and disadvantages of bridge rectifier.

5. Attempt any TWO of the following: 12

a) Draw frequency response of two stage RC coupled amplifier. Write procedure to calculate bandwidth and state any two methods to improve bandwidth.

b) State the need of regulator. Draw circuit diagram of DC regulated dual power supply for ±12V using IC's 78XX and 79XX

c) State race around condition. Draw the circuit diagram of master slave JK flipflop using NAND gates and explain it's operation.

6. Attempt any TWO of the following: 12

a) List two applications of oscillator. Calculate the frequency of oscillation for RC phase shift oscillator for the components values $R = 8{\cdot}2K\Omega$, $C = 0{\cdot}01\mu F$, $R_1 = 1{\cdot}2K\Omega$, $R_F = 39K\Omega$.

b) Define transistor. Explain how transistor works as a switch with input and output waveforms.

c) Draw implementation of EX-OR and EX-NOR logic gate using NAND and NOR gate.

WINTER-19 EXAMINATION

Subject Name: Elements of Electronics engineering **Subject Code:** 22213

Model Answer

Important Instructions to examiners:

1) The answers should be examined by key words and not as word-to-word as given in themodel answer scheme.
2) The model answer and the answer written by candidate may vary but the examiner may tryto assess the understanding level of the candidate.
3) The language errors such as grammatical, spelling errors should not be given moreImportance (Not applicable for subject English and Communication Skills.
4) While assessing figures, examiner may give credit for principal components indicated in thefigure. The figures drawn by candidate and model answer may vary. The examiner may give credit for anyequivalent figure drawn.
5) Credits may be given step wise for numerical problems. In some cases, the assumed constantvalues may vary and there may be some difference in the candidate's answers and model answer.
6) In case of some questions credit may be given by judgement on part of examiner of relevant answer based on candidate's understanding.
7) For programming language papers, credit may be given to any other program based on equivalent concept.

Q. No.	Sub Q. N.	Answers	Marking Scheme
1	(A)	**Attempt any FIVE of the following:**	**10- Total Marks**
	(a)	**Draw symbols of zener diode and LED.**	**2M**
	Ans:	**Symbol of zener diode :** **Symbol of LED :** 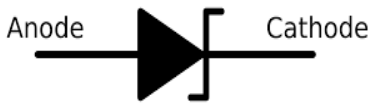 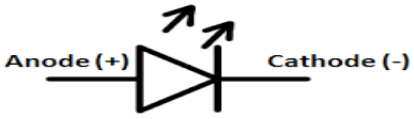	**1 mark each**
	(b)	**List the types of filters.**	**2M**
	Ans:	**Types of filter are as follows:** **1. Shunt Capacitor filter (C filter)**	**½ M each**

		2. Series Inductor filter (L filter) 3. LC filter 4. π filter (CLC filter)	
	(c)	**Draw symbol of NPN and PNP transistors.**	2M
	Ans:		1 M each
	(d)	**Define the term line regulation and load regulation.**	2M
	Ans:	**Line Regulation :** Line regulation is the ability of a power supply to maintain a constant output voltage irrespective of any changes in input voltage. **Load Regulation :** Load regulation is the ability of a power supply to maintain a constant output voltage irrespective of any changes in load current. $$Load\ regulation = \left(\frac{V_{NL} - V_{FL}}{V_{FL}}\right) \times 100\%$$ **(Formula is optional)**	1 M each
	e)	**Suggest the diode material suitable to rectify 0.5V AC signal.**	2M
	Ans:	The diode material suitable to rectify 0.5V AC signal is **silicon**.	2M
	f)	**Draw circuit of zener diode as a voltage regulator.**	2M

WINTER-19 EXAMINATION

Subject Name: Elements of Electronics engineering **Subject Code:** 22213

Model Answer

	Ans:	**Circuit Diagram:** 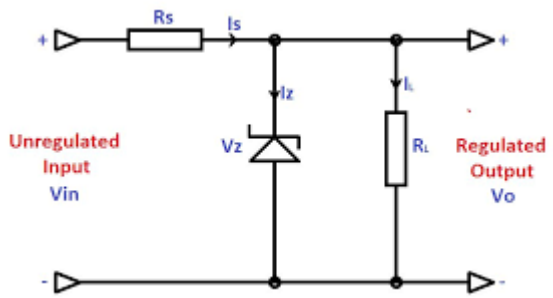 **OR** 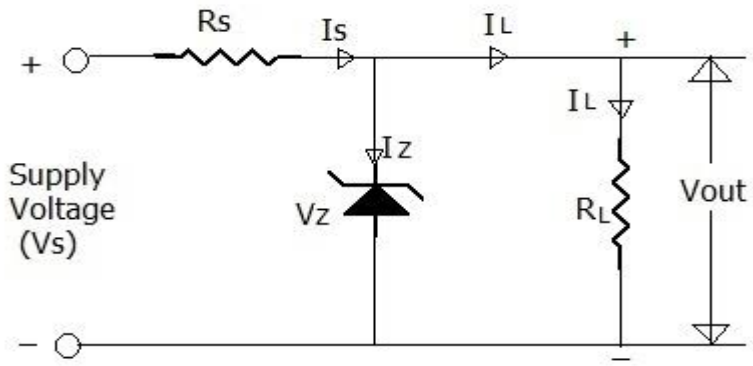 Zener diode Voltage Regulator	**2M**
	g)	**Draw truth table for logic gates represented by following IC's.** **(i) IC 7400** **(ii) IC 7402**	**2M**
	Ans:	**i) IC 7400 - NAND gate** **ii) IC 7402 - NOR gate**	**½ M identify each IC ½ M Truth table**

Inputs		Output
A	B	$Y=\overline{A.B}$
0	0	1
0	1	1
1	0	1
1	1	0

Inputs		Output
A	B	$Y=\overline{A+B}$
0	0	1
0	1	0
1	0	0
1	1	0

Q. No.	Sub Q. N.	Answers	Marking Scheme
2		**Attempt any THREE of the following:**	**12- Total Marks**
	a)	**Draw and explain V-I characteristics of PN junction diode.**	**4M**
	Ans:	V-I characteristics of PN junction diode: 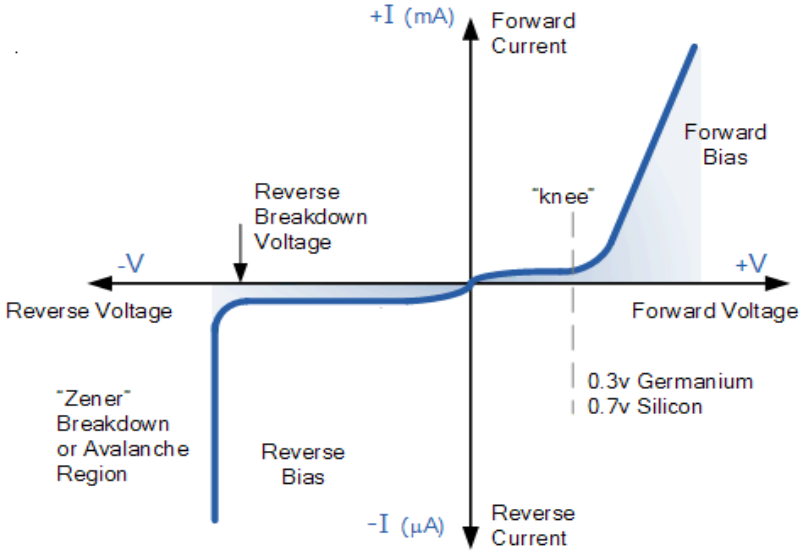	**2M Charact eristics**

		Explanation: Forward Bias: • If the external voltage applied on the silicon diode is less than 0.7 volts, the silicon diode allows only a small negligible electric current. • When the external voltage applied on the silicon diode reaches 0.7 volts, the p-n junction diode starts allowing large electric current through it. • At this point, a small increase in voltage increases the electric current rapidly. • The forward voltage at which the silicon diode starts allowing large electric current is called cut-in voltage. • The cut-in voltage for silicon diode is approximately 0.7 volts. Reverse Bias: • Due to thermal energy in crystal minority carriers are produced. • These minority carriers are the electrons and holes pushed towards P-N junction by the negative terminal and positive terminal, respectively. • Due to the movement of minority carriers, a very little current flows, which is in nano Ampere range (for silicon). This current is called as reverse saturation current. • When the reverse voltage is increased beyond the limit and the reverse current increases drastically is called as reverse breakdown voltage. • Diode breakdown occurs by two mechanisms: Avalanche breakdown and Zener breakdown.	**1M** **1M**
	b)	**Explain shunt capacitor filter with the help of circuit diagram and waveform.**	**4M**

	Ans:	Circuit Diagram: 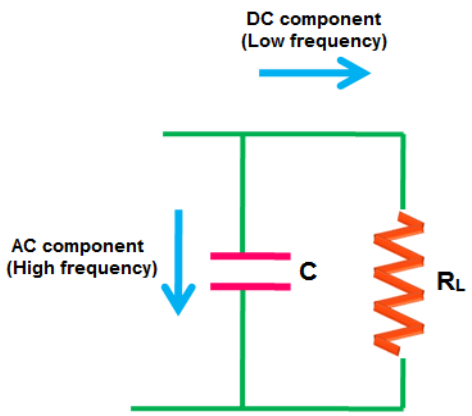 Waveforms: 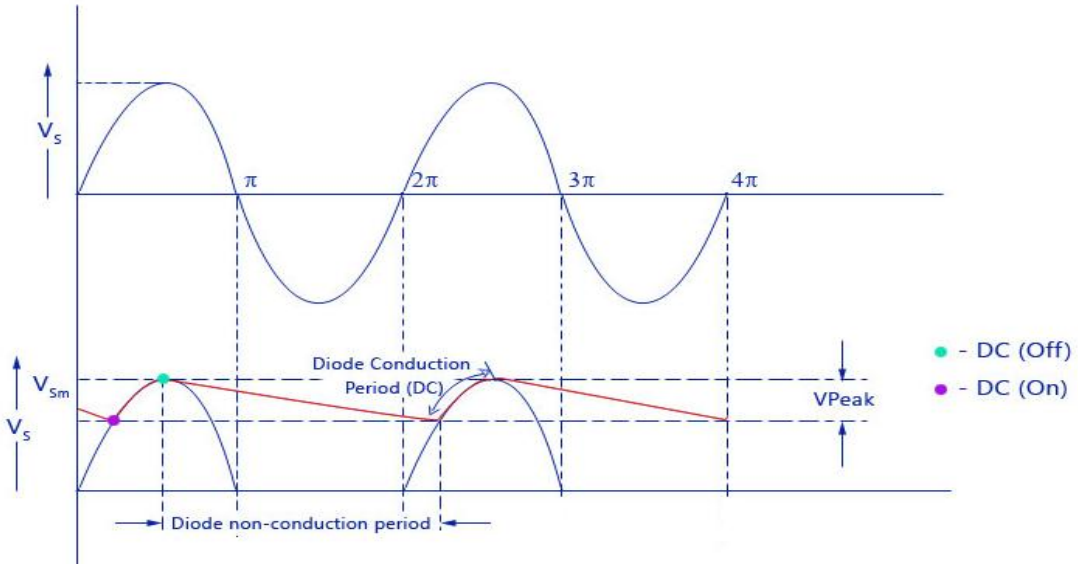 Half wave Rectifier with shunt capacitor	Diagram -1Mark Any waveform-1 Mark (either half wave or full wave) Explanation-2mark

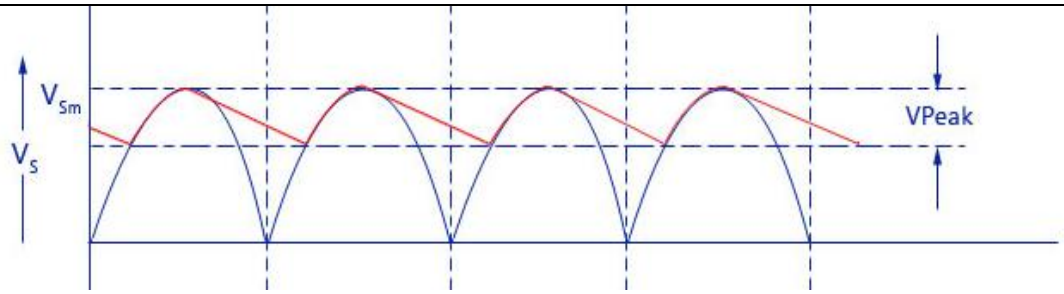

Full wave Rectifier with shunt capacitor

Note: Consider any one Waveform = half wave or Full wave rectifier with shunt capacitor

Explanation:

- The pulsating DC produced by the rectifier contains both AC and DC components.
- The capacitor allows the AC components and blocks the DC components of the current.
- When the DC current that contains both DC components and AC components reaches the filter, the DC components experience a high resistance from the capacitor whereas the AC components experience a low resistance from the capacitor.
- Electric current always prefers to flow through a low resistance path. So the AC components will flow through the capacitor whereas the DC components are blocked by the capacitor. Therefore, they find an alternate path and reach the output load resistor RL.
- Thus, the filter converts the pulsating DC into pure DC.

c) Compare CB, CE, CC configuration of BJT with respect to following points: **4M**

(i) Input impedance
(ii) Output impedance
(iii) Current gain
(iv) Voltage gain

Ans: **1M each point**

Parameter	CB	CE	CC
Input impedance	Very Low(less than 100 ohm)	Low(less than 1K)	Very High(750K)

Output impedance	Very High	High	Low
Current gain	Less than 1	High	Very high
Voltage gain	Greater than CC but less than CE	Highest	Lowest(less than 1)

d) Draw the functional block diagram of IC 723. State any two features of IC 723. **4M**

Ans: Functional block diagram of IC 723: **2M**

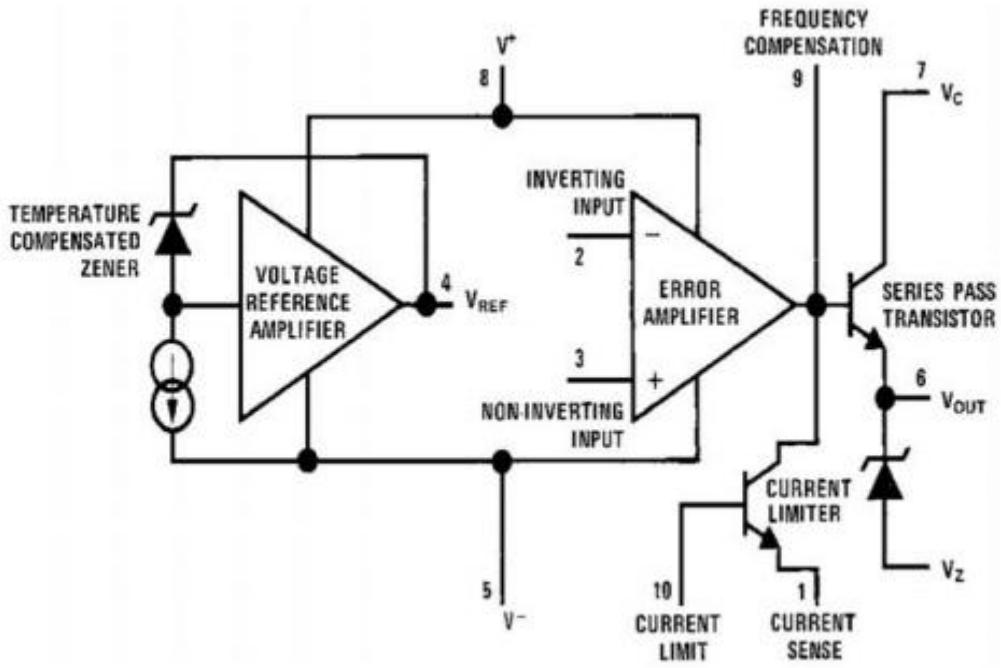

Features of IC 723: (Any two points) **2M**

- Unregulated dc supply voltage at the input between 9.5V & 40V
- Adjustable regulated output voltage between 2 to 3V.
- Maximum load current of 150 mA (ILmax = 150mA).
- With the additional transistor used, ILmax upto 10A is obtainable.
- Positive or Negative supply operation
- Internal Power dissipation of 800mW.

		• Built in short circuit protection. • Very low temperature drift. • High ripple rejection.	
Q. No.	Sub Q. N.	Answers	Marking Scheme
3		**Attempt any THREE of the following :**	**12- Total Marks**
	a)	**Draw block diagram of DC regulated power supply and explain function of each block with waveform.**	**4M**
	Ans:	**Block diagram of DC regulated power supply** 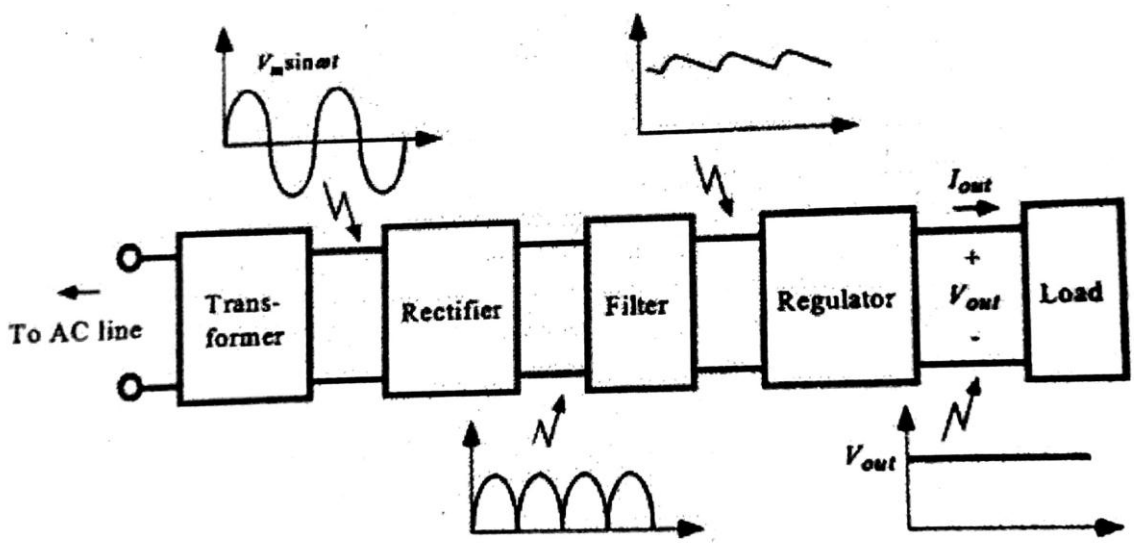 	**2marks for Block diagram**

		Function of each block: **1. Step Down Transformer:** A step down transformer will step down the voltage from the ac mains to the required voltage level. The turn's ratio of the transformer is so adjusted such as to obtain the required voltage value. The output of the transformer is given as an input to the rectifier circuit. **2. Rectifier** Rectifier is an electronic circuit consisting of diodes which carries out the rectification process. Rectification is the process of converting an alternating voltage or current into corresponding direct (dc) quantity. Examples of rectifiers: full wave rectifier or a bridge rectifier **3. DC Filter:** The rectified voltage from the rectifier is a pulsating dc voltage having very high ripple content. To remove the ripple content and to get a pure ripple free dc waveform. Hence a filter is used. Different types of filters are: capacitor filter, LC filter, Choke input filter, π type filter. **4. Regulator:** This is the last block in a regulated DC power supply. The output voltage or current will change or fluctuate when there is change in the input from ac mains or due to change in load current at the output of the regulated power supply or due to other factors like temperature changes. This problem can be eliminated by using a regulator. A regulator will maintain the output constant even when changes at the input or any other changes occur.	**2marks for Explanation**
	b)	**State and explain Barkhausen's criteria required for oscillations.**	**4M**
	Ans:	**Barkhausen's criteria :** An amplifier will work as an oscillator if and only if it satisfies a set of conditions called Barkhausen's criterion. It states that: • An oscillator will operate at that frequency for which the total phase shift around loop equals to 0◦ or 360◦. • At the oscillator frequency, the magnitude of the product of open loop gain of the amplifier A and the feedback factor β is equal or greater than unity. ie. $A\beta \geq 1$	**2marks for Statement** **2marks for Explanation**

	c)	**State need of biasing of BJT. List types of biasing.**	**4M**
	Ans:	**Need of biasing :** The basic need of transistor biasing is to keep the base – emitter (BE) junction properly forward biased and the collector – emitter (CE) junction properly reverse biased during the application of AC signal. This type of transistor biasing is necessary for normal and proper operation of transistor to be used for amplification. **Types of biasing** 1. Fixed bias. 2. Collector-to-base bias. 3. Fixed bias with emitter resistor. 4. Voltage divider bias or potential divider. 5. Emitter bias.	**2marks for need of biasing** **2marks for Types of biasing**
	d)	**A half wave rectifier is used to supply 50V DC to a resistive load of 1KΩ. The diode has a resistance of 10Ω. Calculate required input AC voltage.**	**4M**

	Ans:	3d Sol $V_{dc} = 50V$, $R_L = 1K\Omega$, $R_f = 10\Omega$ find $V_{in} = ?$ The average value of load current $I_{dc} = \frac{V_{dc}}{R_L} = \frac{50}{1000} = 0.05A$ and maximum value of the load current $I_m = \pi \times I_{dc} = \pi \times 0.05$ $= 0.157 A$ ∴ Required Input AC voltage is $V_{in} = I_m \times (R_f + R_L)$ $= 0.157 \times (10 + 1000)$ $V_{in} = 158.57 V$	2marks for Im 2marks for V_{in}

Q. No.	Sub Q. N.	Answers	Marking Scheme
4		**Attempt any THREE of the following :**	**12- Total Marks**
	(a)	**Draw the circuit diagram of crystal oscillator and give the basic principle of piezoelectric crystal.**	**4M**
	Ans:	**circuit diagram of crystal oscillator:**	**2marks for circuit diagram**

		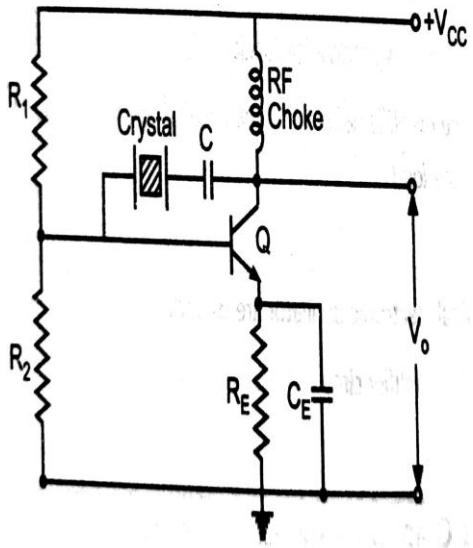 **Piezoelectric principle** : Crystal exhibits a property called as piezo-electric property, which states that: When the crystal is placed across an ac source, it starts vibrating. The amount of vibration depends upon the frequency of the applied voltage (By changing the frequency , we can find a frequency at which the crystal vibrations reach its maximum value & this frequency called as resonant frequency = $\frac{1}{2\Pi\sqrt{LC}}$ Also if mechanical force is applied to crystal then it generates electric potential.	**2marks for principle**
	(b)	**Compare half wave rectifier and full wave rectifier with respect to:** **(i) PIV** **(ii) Ripple frequency** **(iii) TUF** **(iv) Efficiency**	**4M**
	Ans:	**Ans:(Note: Bridge rectifier also can be considered)**	**1mark for Each point**

S. N.	Parameter	Half Wave Rectifier	Full Wave Rectifier(center tap)
1	PIV	Vm	2Vm
2	Ripple frequency	f_{in}	$2f_{in}$
3	TUF	0.287	0.693
4	Efficiency	40.6%	81.2%

(c) **In a common base configuration, current amplification factor is 0.8. If current is 2mA, determine the value of base current.** **4M**

Ans:

4C
Sol

$\alpha = 0.8, \quad I_E = 2\,mA$

Find $I_B = ?$

$\because I_C = \alpha I_E$

$= 0.8 \times 2\,mA = 1.6\,mA$

$\therefore I_B = I_E - I_C = 2 - 1.6$

$= 0.4\,mA$

$\therefore I_B = 0.4\,mA$

2 marks for Ic

2 marks for I_B

(d) **Describe the operating principle of LASER diode with constructional diagram.** **4M**

Ans: **constructional diagram of LASER diode:** **2marks for any relevant diagram**

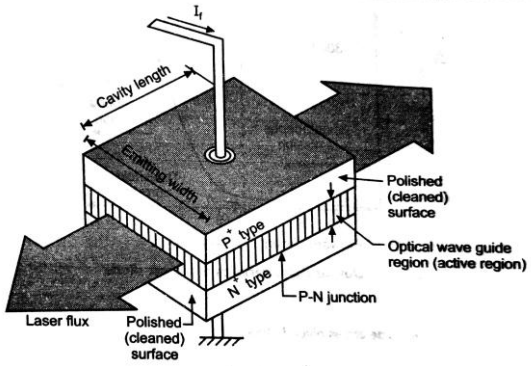

(OR)

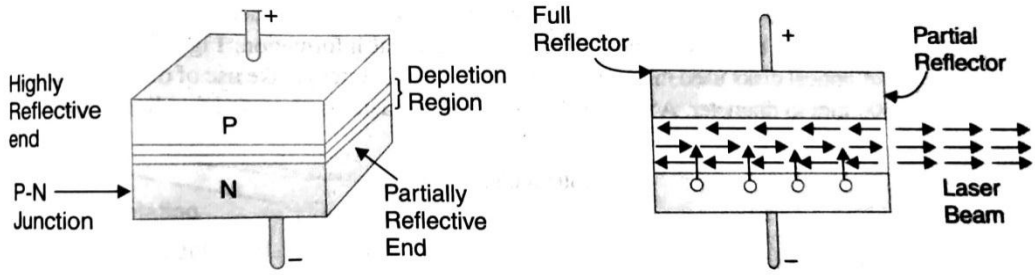

2marks for operating principle

Operating principle of LASER diode :

When the P-N junction is forward-biased by an external voltage source, electrons move across the junction and usual recombination occurs in the depletion region which results in the production of photons. As forward current is increased, more photons are produced which drift at random in the depletion region. Some of these photons strike the reflective surface perpendicularly. These reflected photons move back and forth between the two reflective surfaces. The photon activity becomes so intense that at some point, a strong beam of laser light comes out of the partially reflective surface of the diode.

	(e)	**List out advantages and disadvantages of bridge rectifier.**	**4M**
	Ans:	**Advantages :** 1. Bridge rectifier can be used in applications allowing floating output terminals i.e. not output terminal is grounded. 2. The need of center-tapped transformer is eliminated.	**2 Marks for any 2 advantages**

		3. If stepping up or stepping down of AC voltage is not needed, then it does not even require any transformer. 4. Transformer needed is less costly as it is required to provide only half the voltage of an equivalent centre tapped transformer used in a full wave rectifier circuit. 5. The output is twice that of centre tapped circuit for the same secondary voltage 6. Transformer utilization factor, in case of a bridge rectifier, is higher than that of a centre-tap rectifier. **Disadvantages :** 1. It requires four semi conductor diodes 2. Two diodes in series conduct at a time on alternate half cycles. This creates a problem when low DC voltages are required. This leads to poor regulation. 3. The value of the diodes used should be precise , else there will be an error in rectification. **Note: Any relevant points to be considered**	**2 Marks for any 2 disadvantages**
Q. No.	Sub Q. N.	Answers	Marking Scheme
5.		**Attempt any TWO of the following:**	**12- Total Marks**
	a)	**Draw frequency response of two stage RC coupled amplifier. Write procedure to calculate bandwidth and state any two methods to improve bandwidth.**	**6M**
	Ans:	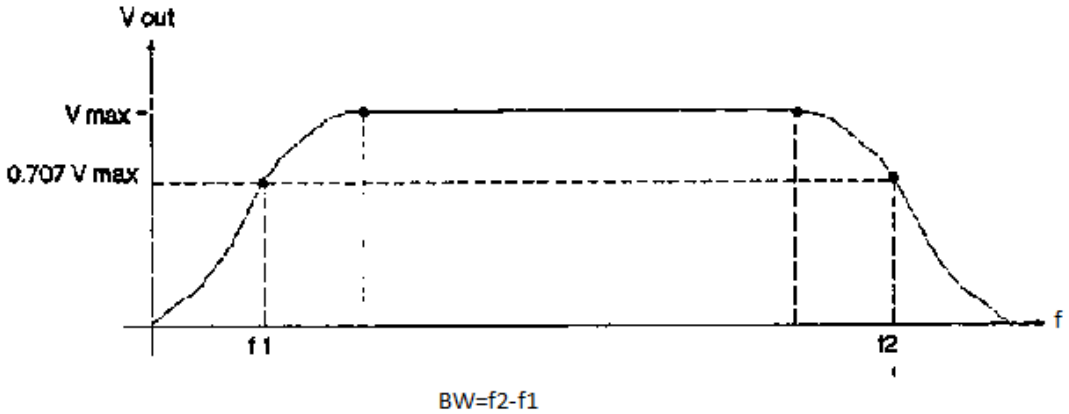	**frequency response-1 mark** **procedure to calculate**

		1. Find the Frequency points i.e. f_1 and f_2 relate to the lower corner or cut-off frequency and the upper corner or cut-off frequency points respectively were the circuits gain falls off at high and low frequencies. 2. These points on a frequency response curve are known commonly as the -3dB (decibel) points. 3. The bandwidth is given as: Bandwidth=f2-f1 **Bandwidth improved by-** 1. By using Negative feedback 2. By Modifying Input and Output Impedance	**bandwidth-2 marks Bandwidth improved-1 mark**
	b)	**State the need of regulator. Draw the circuit diagram of DC regulated dual power supply for ± 12 V using IC 78XX and IC 79XX.**	**6M**
	Ans:	**Need of regulator-** The purpose of a voltage **regulator** is to keep the voltage in a circuit relatively close to a desired value. There are considerable variations in a.c. line voltage caused by outside factors. This changes the d.c. output voltage and may damage the electronic circuits and appliances. This necessitates to use regulator. The internal resistance of ordinary power supply is relatively large (>3Ω). Therefore, output voltage is affected by the amount of load current drawn from the supply. These variation in d.c. voltage may cause deviation in operation of electronic circuits. Therefore, voltage regulator is the only solution in such situations.	**Need-2M**

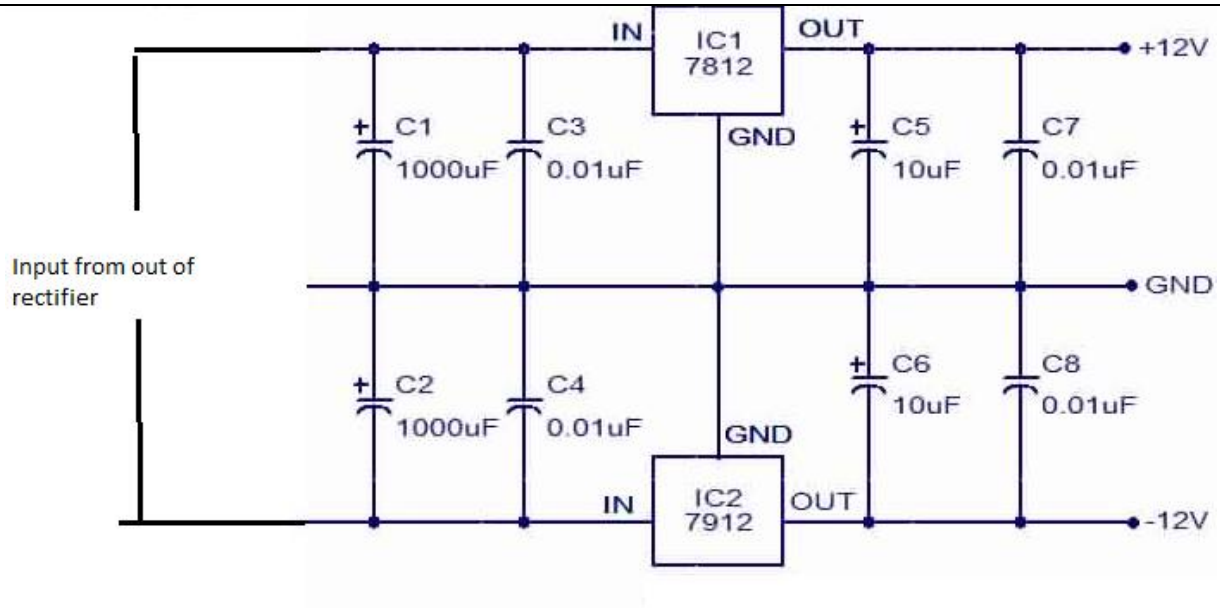

Diagram -4M

	c)	**State the race around condition. Draw the circuit diagram of master slave JK flip flop using NAND gates and explain its operation.**	**6M**
	Ans:	In JK flip flop as long as clock is high for the input conditions J&K equals to the output changes or complements its output from 1–>0 and 0–>1. This is called toggling output or uncontrolled changing or racing condition.	**State- 2M**

Circuit Diagram-

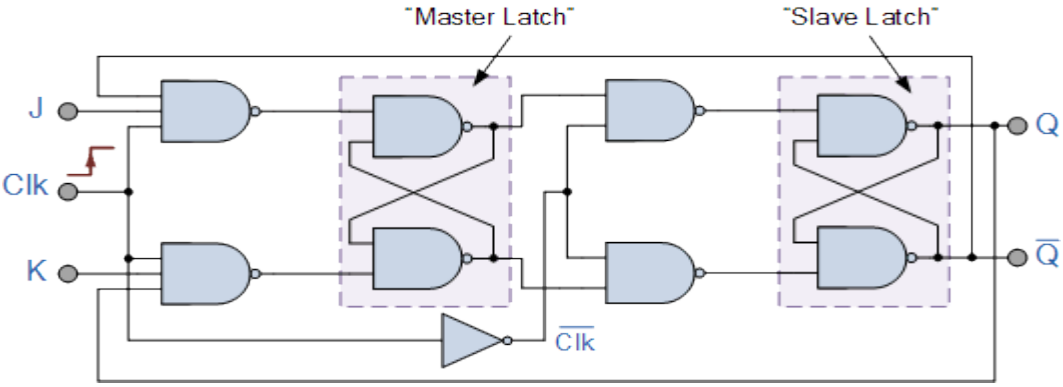

Diagram -2M

The Master-Slave Flip-Flop is basically a combination of two JK flip-flops connected together in a series configuration. Out of these, one acts as the **"master"** and the other as a **"slave"**. The output from the master flip flop is connected to the two inputs of the slave flip flop whose output is fed back to inputs of the master flip flop.

		In addition to these two flip-flops, the circuit also includes an **inverter**. The inverter is connected to clock pulse in such a way that the inverted clock pulse is given to the slave flip-flop. In other words if CLK=0 for a master flip-flop, then CLK=1 for a slave flip-flop and if CP=1 for master flip flop then it becomes 0 for slave flip flop. 1. When the clock pulse goes to 1, the slave is isolated; J and K inputs may affect the state of the system. The slave flip-flop is isolated until the CLK goes to 0. When the CLK goes back to 0, information is passed from the master flip-flop to the slave and output is obtained. 2. If J=0 and K=1, the output Q reset 3. If J=1 and K=0, the output Q set 4. If J=1 and K=1, it toggles on the positive transition of the clock and thus the slave toggles on the negative transition of the clock. 5. If J=0 and K=0, the flip flop is disabled and Q remains unchanged.	**Operation-2M**
Q. No.	Sub Q. N.	Answers	Marking Scheme
6.		**Attempt any TWO of the following :**	**12- Total Marks**
	a)	**List two applications of oscillator. Calculate the frequency of oscillation for RC phase shift oscillator for the component values R=8.2KΩ, C =0.01µF, R_1=1.2KΩ, R_F= 39KΩ.**	**6M**

	Ans:	**Applications of oscillator:** 1. In radio and television receivers 2. Used in computers, metal detectors, stun guns, inverters, ultrasonic and radio frequency applications. 3. Used to generate clock pulses for microprocessors and micro-controllers 4. Quartz watches (which uses a crystal oscillator) 5. Used in various audio systems and video systems **Given** **R=8.2KΩ, C =0.01µF, R_1=1.2KΩ, R_F= 39KΩ** $$f = \frac{1}{2\pi RC\sqrt{6}}$$ $$f = \frac{1}{2\pi * 8.2 * 10^3 * 0.01 * 10^{-6} * \sqrt{6}}$$ $$f = \frac{1}{0.515 * 10^{-3} * \sqrt{6}}$$ $$f = \frac{1}{1.26 * 10^{-3}}$$ $$f = 793.65HZ$$	**Application-3M** **3M**
	b)	**Define transistor. Explain how transistor works as a switch with input and output waveforms.**	**6M**
	Ans:	Definition of transistor: A semiconductor device with three connections, capable of amplification in addition to rectification.	**1M**

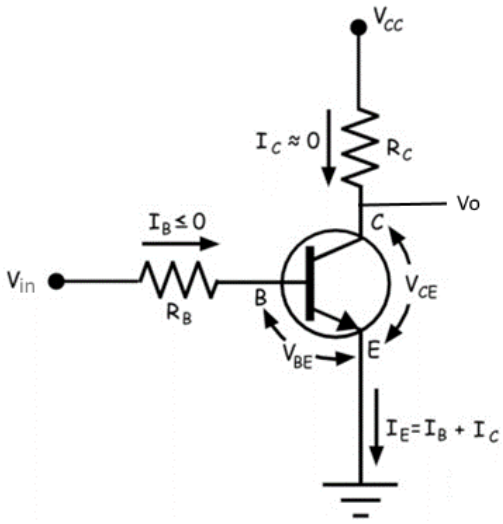

Diagram -2M

Working -2M

Working: Control input Vin is given to base through a current limiting resistor R_B and Rc is the collector resistor which limits the current through the transistor .When a sufficient voltage V is given to input, transistor becomes ON & it goes into saturation. During this condition the Collector Emitter voltage V_{CE} will be approximately equal to zero, ie the transistor acts as a short circuit & Vo = 0.

When input voltage V=0, transistor becomes OFF & it goes into cutoff. The transistor acts as an open circuit. During this condition the Collector Emitter voltage V_{CE}=Vcc. Therefore Vo = Vcc.

Waveform-1M

Waveform:

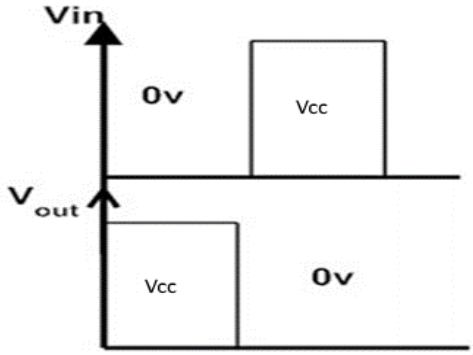

	c)	**Draw implementation of EX-OR and EX-NOR logic gate using NAND and NOR gate.**	**6M**
	Ans:	EX-OR gate using NAND: 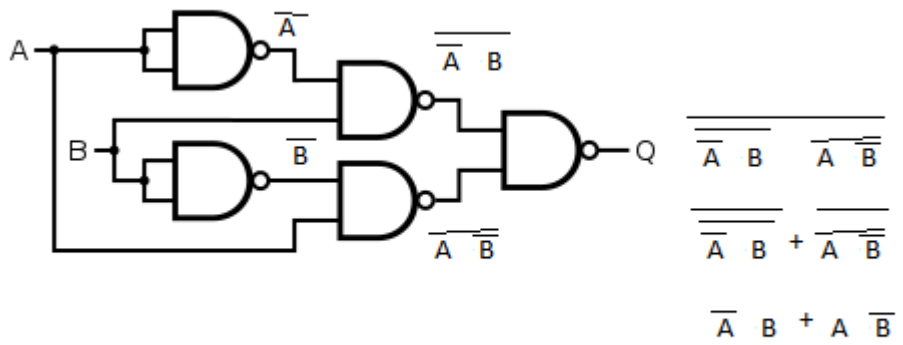 EX-OR gate using NOR: 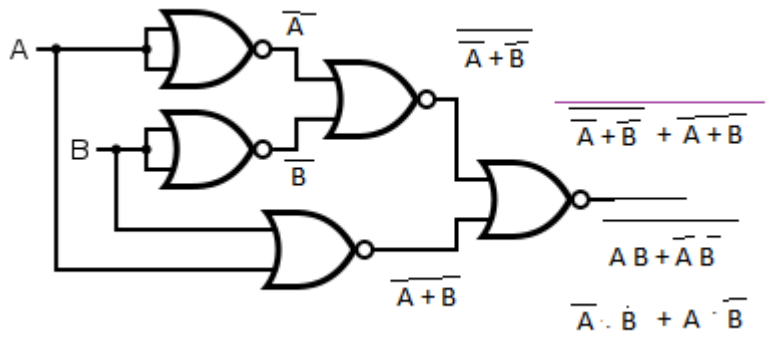 EX-NOR gate using NAND:	**1.5M each**

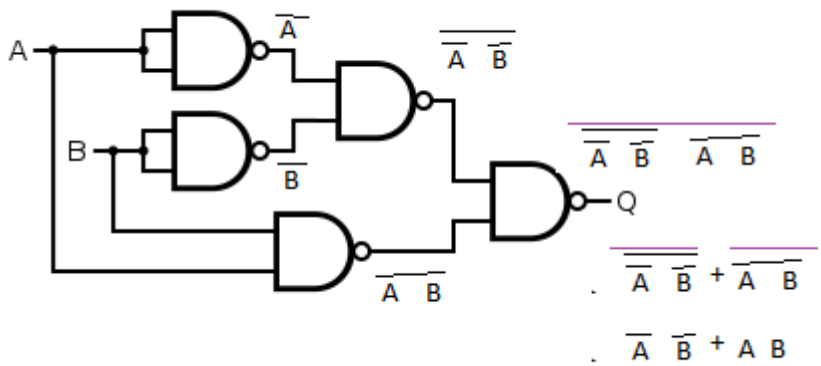

EX-NOR gate using NOR: