	ZEAL EDUCATION SOCIETY'S **ZEAL POLYTECHNIC,PUNE** NARHE │PUNE -41 │ INDIA **DEPARTMENT OF E&Tc ENGINEERING**	

Question Bank for Multiple Choice Questions

Program: Diploma in E&Tc engineering	**Program Code:- EJ**
Scheme:-I	**Semester:- 5**
Course:- Control System & PLC (CSP)	**Course Code:- 22531**

01 – Basic of control system	**Marks:-12**

Content of Unit:-

1.1 Basics of control systems
Basic block diagram & classification
1.2 Open loop & Close loop control system details & their comparison
Linear & Nonlinear control systems, Time varying & Time in varying control system details
1.3 Transfer Functions: RC, LC & RLC circuits – differential equations & transfer functions along with analysis
1.4 Block diagram reduction technique

1	**The overall transfer function of two blocks in parallel are :**
a)	Sum of individual gain
b)	Product of individual gain
c)	Difference of individual gain
d)	Division of individual gain
	Answer: - Option A
	Explanation: -

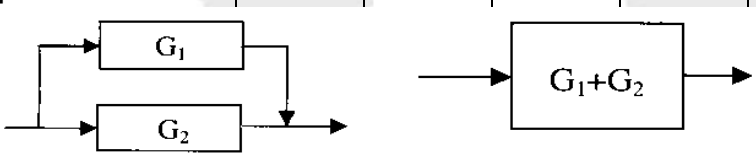

2.	**Transfer function of the system is defined as the ratio of Laplace output to Laplace input considering initial conditions_____**
a)	1
b)	2
c)	0
d)	infinite
	Answer: - Option A
	Explanation: - Initials conditions should be zero for calculation

3	**In regenerating the feedback, the transfer function is given by**
a)	C(s)/R(s)=G(s)/1+G(s)H(s)
b)	C(s)/R(s)=G(s)H(s)/1-G(s)H(s)
c)	C(s)/R(s)=G(s)/1+G(s)H(s)
d)	C(s)/R(s)=G(s)/1-G(s)H(s)
	Answer: - Option A
	Explanation: -
	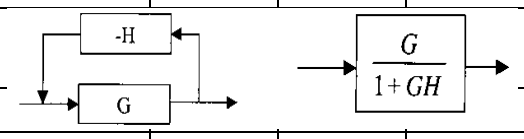
4	By equating the denominator of transfer function to zero, which among the following will be obtained?
a)	Poles
b)	Zeros
c)	Both a and b
d)	None of the above
	Answer: - Option A
	Explanation: - Poles and Zeros of a transfer function are the frequencies for which the value of the denominator and numerator of transfer function becomes zero respectively.
5	The overall transfer function from block diagram reduction for cascaded blocks is :
a)	Sum of individual gain
b)	Product of individual gain
c)	Difference of individual gain
d)	Division of individual gain
	Answer: - Option b
	Explanation:
	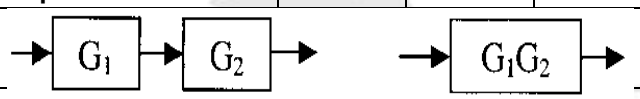
6	**The output of the feedback control system must be a function of:**
a)	Reference input
b)	Reference output
c)	Output and feedback signal
d)	Input and feedback signal
	Answer: - Option d
	Explanation: In closed loop control systems, output is fed back to the input. So, the control action is dependent on the desired output.
7	**Which among the following is not an advantage of an open loop system?**
a)	Simplicity in construction & design

b)	Easy maintenance					
c)	Rare problems of stability					
d)	Requirement of system recalibration from time to time					
	Answer: - Option d					
	Explanation: Open loop system requires calibration time to time.					
8	**Associative law for summing point is applicable only to those summing points which are _____connected to each other.**					
a)	Directly					
b)	Indirectly					
c)	Orthogonally					
d)	Diagonally					
	Answer: - Option a					
	Explanation:					
	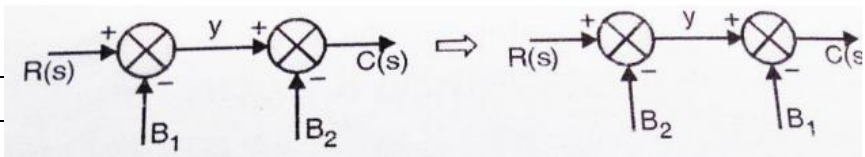					
9	**In block diagram representation, what do the lines connecting the blocks, known as?**					
a)	Branches					
b)	Nodes					
c)	Datums					
d)	Sources					
	Answer: - Option d					
	Explanation: Arrows indicate the direction of the flow of signals and lines are called as sources.					
10	**At summing point, more than one signal can be added or _____**					
a)	Subtracted					
b)	Multiplied					
c)	Both a and b					
d)	None of the above					
	Answer: - Option a					
	Explanation: Summing point is used to add or subtract two signals.					
11	Which of the following is not the feature of modern control system?					
a)	Quick response					
b)	Accuracy					
c)	Correct power level					
d)	No oscillation					

	Answer: - Option d						
12	For a good control system the speed of response and stability must be high and for the slow and sluggish response is not used and undesirable.						
a)	The principle of homogeneity and superposition are applied to:						
b)	Linear time invariant systems						
c)	Nonlinear time invariant systems						
d)	Linear time variant systems						
	Nonlinear time invariant systems						
	Answer: - Option d						
13	Superposition theorem states that for two signals additivity and homogeneity property must be satisfied and that is applicable for the LTI systems.						
	When deriving the transfer function of a linear element						
a)	Both initial conditions and loading are taken into account						
b)	Initial conditions are taken into account but the element is assumed to be not loaded						
c)	Initial conditions are assumed to be zero but loading is taken into account						
d)	Initial conditions are assumed to be zero and the element is assumed to be not loaded						
	Answer: - Option c						
	Explanation: When deriving the transfer function of a linear element only initial conditions are assumed to be zero, loading cannot be assumed to be zero.						
14	The advantage of block diagram representation is that it is possible to evaluate the contribution of each component to the overall performance of the system.						
a)	True						
b)	False						
	Answer: - Option a						
	Explanation: The advantage of the block diagram is that it is possible to get the contribution of each block to the overall performance of the system.						
15	The overall transfer function from block diagram reduction for cascaded blocks is :						
a)	Sum of individual gain						
b)	Product of individual gain						
c)	Difference of individual gain						
d)	Division of individual gain						
	Answer: - Option b						
16	Transfer function of the system is defined as the ratio of Laplace output to Laplace input considering initial conditions_____						
a)	1						
b)	2						
c)	0						
d)	infinite						

	Answer: - Option c						
	Explanation: By definition transfer function is the ratio of the laplace output to the input but the initial conditions mainly the stored energy is zero.						
17	The mechanism of control of body temperature is non feedback system?						
a)	True						
b)	False						
	Answer: - Option b						
	Explanation: It is feedback system as the temperature of our body is regulated periodically and being warm blooded we regulate our body temperature w.r.t. to the climate.						
18	Benefits of feedback:						
a)	Performance of system is greater.						
b)	Need for system much larger path gain and system instability.						
c)	Controlled variable accurately follows the desired value						
d)	Affected by parameter variations						
	Answer: - Option d						
	Explanation: Closed loop system is the system with the feedback and this can be positive or negative feedback and having feedback have less dependence on parameter variation.						
19	Feedback always increases the gain?						
a)	True						
b)	False						
	Answer: - Option b						
	Explanation: It cannot always increase gain it can also reduce the gain as gain of Open loop control system is more as compared to it.						
20	Feedback control systems are:						
a)	Insensitive to both forward and feedback path parameter changes						
b)	Less sensitive to feedback path parameter changes than to forward path parameter changes						
c)	Less sensitive to forward path parameter changes that to feedback path parameter changes						
d)	Equally sensitive to forward feedback path parameter changes						
	Answer: - Option c						
	Explanation: Feedback control system can be positive and negative but positive feedback systems less widely used as the positive feedback systems are more sensitive to parameter variations but negative feedback are less sensitive to change in G than change in H.						
21	The closed system has higher _____ than open loop control system, this implies increased speed of response.						
a)	Gain						
b)	Bandwidth						
c)	Frequency						
d)	Speed						

	Answer: - Option b						
	Explanation: As transient response of the system is improved by the use of feedback and it causes the settling time to reduce and closed loop system has higher bandwidth than open loop systems and this implies increase in speed of response.						
22	Feedback can always reduce the effects of noise and disturbance on system performance?						
a)	True						
b)	False						
	Answer: - Option a						
	Explanation: Feedback has many advantages as it can reduces the effects of noise and disturbance on system performance by increasing speed of response.						
23	Multiple signals as input can be used in which systems:						
a)	Feedback systems						
b)	Non feedback systems						
c)	Feedforward systems						
d)	None of the mentioned						
	Answer: - Option a						
	Explanation: As in feedback system output can be obtained for more than one input as output can be generated for both the reference input and also for the disturbance input.						
24	Feedback can cause a system that is originally stable to become_____						
a)	Stable						
b)	Unstable						
c)	Conditionally stable						
d)	Either more stable or unstable						
	Answer: - Option d						
	Explanation: Feedback can either make a system stable if not stable previously or may be it can cause instability as it reduces the gain of the system and hence the system can become stable if unstable or vice versa.						
25	Regenerative feedback implies feedback with						
a)	Oscillations						
b)	Step input						
c)	Negative sign						
d)	Positive sign						
	Answer: - Option d						
	Explanation: Regenerative feedback that is the positive feedback implies feedback with Positive sign and for complementary root locus is for the regenerative feedback.						
26	The output of a feedback control system must be a function of						

a)	Reference and output						
b)	Reference and input						
c)	Input and feedback signal						
d)	Output and feedback signal						
	Answer: - Option d						
	Explanation: The response of the control system is the output of the control system that depends upon the transfer function of the system and feedback system and also upon the input of the system.						
27	A control system with excessive noise, is likely to suffer from						
a)	Saturation in amplifying stages						
b)	Loss of gain						
c)	Vibrations						
d)	Oscillations						
	Answer: - Option a						
	Explanation: Noise is defined as the unwnated output due to the input and this is due to the excessive bandwidth and control system with excessive noise is likely to suufer from saturation in amplifying stages.						
28	Zero initial condition for a system means						
a)	Input reference signal is zero						
b)	Zero stored energy						
c)	Initial movement of moving parts						
d)	System is at rest and no energy is stored in any of its components						
	Answer: - Option d						
	Explanation: Zero initial condition means that the system is at rest and no energy is stored in any of its component.						
29	Transfer function of a system is used to calculate which of the following?						
a)	The order of the system						
b)	The time constant						
c)	The output for any given input						
d)	The steady state gain						
	Answer: - Option c						
	Explanation: Transfer function of a system is that ratio of Laplace output to the Laplace input at zero initial conditions and which is used to calculate the output for any given input.						
30	The band width, in a feedback amplifier.						
a)	Remains unaffected						
b)	Decreases by the same amount as the gain increase						
c)	Increases by the same amount as the gain decrease						
d)	Decreases by the same amount as the gain decrease						
	Answer: - Option c						
	Explanation: The bandwidth is defined as the difference in the higher frequency to the input frequency and increase in the bandwidth leads to the noise and in a feedback amplifier increases by the same						

	amount as the gain decreases.
31	On which of the following factors does the sensitivity of a closed loop system to gain changes and load disturbances depend?
a)	Frequency
b)	Loop gain
c)	Forward gain
d)	All of the mentioned
	Answer: - Option d
	Explanation: Sensitivity is defined as the change in the output with respect to the change in the parameter variations and the change in the input and load disturbances depends upon frequency loop gain and forward gain.
32	The transient response, with feedback system,
a)	Rises slowly
b)	Rises quickly
c)	Decays slowly
d)	Decays quickly
	Answer: - Option d
	Explanation: Transient response is the response that is between time t=0 and at any time and behaviors depends upon the value of damping factor and maximum peak overshoot.
33	The second derivative input signals modify which of the following?
a)	The time constant of the system
b)	Damping of the system
c)	The gain of the system
d)	The time constant and suppress the oscillations
	Answer: - Option d
	Explanation: The time constant is the time required to attain the final value of the steady state and the value if less then the speed of response will be more and second derivative input signals modify suppress the oscillations.
34	The effect of adding feedback makes the system_____
a)	Linear
b)	Non-linear
c)	Time variant
d)	Time invariant
	Answer: - Option a
	Explanation: Consider the single loop system with forward path transfer function as the square function then the response generated is nonlinear if system is open loop but will be approximately linear if closed loop.
35	The relation between output response and input signal in closed loop system is :
a)	Exponential

b)	Parabolic					
c)	Linear					
d)	Nonlinear					
	Answer: - Option c					
	Explanation: Due to the linearizing effect of the feedback the relation between output response and the input signal in closed loop system is linear.					
36	Assertion (: Practical systems must be closed loop system.					
	Reason (R): This is due to the fact that closed loop systems are least affected by parameter variations, stable, higher bandwidth, linear and more speed of response.					
a)	Both A and R are true and R is the correct explanation of A.					
b)	Both A and R are true but R is not the correct explanation of A.					
c)	A is true but R is false.					
d)	A is false but R is true.					
	Answer: - Option a					
	Explanation: Practically systems used must be linear to avoid error, ease of calibration and also to get accurate results but the systems used are non-linear to avoid the error due to the linearity they are approximated.					
37	Regenerative feedback is also called as_____					
a)	Negative feedback					
b)	Positive feedback					
c)	No feedback					
d)	Negative and Positive Feedback					
	Answer: - Option b					
	Explanation: As the name implies that is regenerates the oscillations hence by name it can be positive.					
38	Which of the following are the characteristics of regenerative feedback:					
a)	Zero damping					
b)	Stable					
c)	Least sensitive to parameter variations					
d)	None of the mentioned					
	Answer: - Option a					
	Explanation: Output response is slow and sluggish and transient time is more due to the oscillations.					
39	Which of the following are true:					
a)	Sensitivity of regenerative feedback is more than negative feedback but less than non-feedback system					
b)	Sensitivity of regenerative feedback is more non-feedback system but less than negative feedback system					
c)	Sensitivity of regenerative feedback is less than both					
d)	Sensitivity of regenerative feedback is more than both					

	Answer: - Option c						
	Explanation: Sensitivity of the positive feedback system is even more than non-feedback system and it is more by a factor of 1/1-GH.						
40	Loop gain provided by the regenerative feedback makes the closed loop transfer function insensitive to G(s).						
a)	TRUE						
b)	False						
	Answer: - Option a						
	Explanation: As if the positive feedback loop gain is nearly considered to be unity then transfer function becomes insensitive to G(s).						

41. In an open loop control system
a) Output is independent of control input
b) Output is dependent on control input
c) Only system parameters have effect on the control output
d) None of the mentioned
Answer: a
Explanation: When the input to a system is independent of the output from the system, then the system is called an open-loop or unmonitored system.

42. A control system in which the control action is somehow dependent on the output is known as
a) Closed loop system
b) Semiclosed loop system
c) Open system
d) None of the mentioned
Answer: a
Explanation: When output of a system is measured and is continuously compared with the required value, then it is known as closed-loop or monitored system.

43. In closed loop control system, with positive value of feedback gain the overall gain of the system will
a) decrease
b) increase
c) be unaffected
d) none of the mentioned
Answer: a
Explanation: In closed loop control system, the output is measured and through a feedback transducer, it is sent to an error detector which detects any error in the output from the required value thus adjusting the input in a way to get the required output.

44. Which of the following is an open loop control system ?
a) Field controlled D.C. motor
b) Ward leonard control
c) Metadyne
d) Stroboscope
Answer: a
Explanation: In field control D.C. motor, the input is dependent of the output. So it is an open loop control system.

45. Which of the following statements is not necessarily correct for open control system ?
a) Input command is the sole factor responsible for providing the control action
b) Presence of non-linearities causes malfunctioning
c) Less expensive
d) Generally free from problems of non-linearities
Answer: b
Explanation: When the input to a system is independent of the output from the system, then the system is called an open-loop or unmonitored system. It is also called as a calibrated system. Most measuring instruments are open-loop control systems, as for the same input signal, the readings will depend upon things like ambient temperature and pressure.

46. In open loop system
a) the control action depends on the size of the system
b) the control action depends on system variables
c) the control action depends on the input signal
d) the control action is independent of the output
Answer: d
Explanation: When the input to a system is independent of the output from the system, then the system is called an open-loop or unmonitored system.

47. The following has tendency to oscillate.
a) Open loop system
b) Closed loop system
c) Both (a) and (b)
d) Neither (a) nor (b)
Answer: b
Explanation: Both open loop system and closed loop system have the tendency to oscillate.

48. A good control system has all the following features except
a) good stability
b) slow response
c) good accuracy
d) sufficient power handling capacity
Answer: b
Explanation: Repose is not included in a good control system.

49. A car is running at a constant speed of 50 km/h, which of the following is the feedback element for the driver ?
a) Clutch
b) Eyes
c) Needle of the speedometer

d) Steering wheel
Answer: c
Explanation: The needle of the speedometer is only the indicator of the speed and to keep the speed constant, the driver has to maintain the speed of 50 km/h.

50. A signal flow graph is the graphical representation of the relationships between the variables of set linear algebraic equations.
a) True
b) False
Answer: a
Explanation: By definition signal flow graphs are the graphical representation of the relationships between the variables of set linear algebraic equations.

51. A node having only outgoing branches.
a) Input node
b) Output node
c) Incoming node
d) Outgoing node
Answer: a
Explanation: Nodes are the point by which the branches are outgoing or ingoing and this can be input or output node and input node is the node having only outgoing branches.

52. Which of the following is not the feature of modern control system?
a) Quick respons
b) Accuracy
c) Correct power level
d) No oscillation
Answer: d
Explanation: For a good control system the speed of response and stability must be high and for the slow and sluggish response is not used and undesirable.

53. The output of the feedback control system must be a function of:
a) Reference input
b) Reference output
c) Output and feedback signal
d) Input and feedback signal
Answer: d
Explanation: Feedback control system has the property of reducing the error and that is by differencing the output with the desired output and as the equation of the output of the system is C=GR/1+GH.

54. The principle of homogeneity and superposition are applied to:
a) Linear time invariant systems
b) Nonlinear time invariant systems
c) Linear time variant systems
d) Nonlinear time invariant systems Answer: c
Explanation: Superposition theorem states that for two signals additivity and homogeneity property must be satisfied and that is applicable for the LTI systems.

55. In continuous data systems:

a) Data may be continuous function of time at all points in the system
b) Data is necessarily a continuous function of time at all points in the system
c) Data is continuous at the inputs and output parts of the system but not necessarily during intermediate processing of the data
d) Only the reference signal is continuous function of time
Answer: b
Explanation: Continuous signals are the signals having values for the continuous time and if impulse response decays to zero as time approaches infinity, the system is stable.

56. A linear system at rest is subject to an input signal r(t)=1-e-t. The response of the system for t>0 is given by c(t)=1-e-2t. The transfer function of the system is:
a) (s+2)/(s+1)
b) (s+1)/(s+2)
c) 2(s+1)/(s+2)
d) (s+1)/2(s+2)
Answer: c
Explanation: c(t)=1-e-2t R(s)=1/s-1/s+1 C(s)=1/s-1/s+2 Tf=2(s+1)/(s+2).

57. In regenerating the feedback, the transfer function is given by
a) C(s)/R(s)=G(s)/1+G(s)H(s)
b) C(s)/R(s)=G(s)H(s)/1-G(s)H(s)
c) C(s)/R(s)=G(s)/1+G(s)H(s)
d) C(s)/R(s)=G(s)/1-G(s)H(s)
Answer: d
Explanation: Regenerating feedback is positive feedback and it increases the infinitely and hence the speed of response of the system reduces.

58. A control system whose step response is -0.5(1+e-2t) is cascaded to another control block whose impulse response is e-t. What is the transfer function of the cascaded combination?
a) 1/(s+2)(s+1)
b) 1/(s+1)s
c) 1/(s+3)
d) 0.5/(s+1)(s+2)
Answer: a
Solution: Laplace transform is the transformation that transforms the time domain into frequency domain and of both the cascaded systems are 1/(s+1)(s+2).

59. When deriving the transfer function of a linear element
a) Both initial conditions and loading are taken into account
b) Initial conditions are taken into account but the element is assumed to be not loaded
c) Initial conditions are assumed to be zero but loading is taken into account
d) Initial conditions are assumed to be zero and the element is assumed to be not loaded
Answer: c
Explanation: When deriving the transfer function of a linear element only initial conditions are assumed to be zero, loading cannot be assumed to be zero.

Prepared By Mr. Tupe S.G	**Verified By** Ms. Jarad U.T Module Coordinator	**Re-Verified By** Ms. Navale S.N Academic Coordinator	**Approved By** Mr. Tupe S.G HoD EJ

02 – Time domain stability analysis.	**Marks:-16**
Content of Unit:- 2.1 Time Response : Transient & steady state response 2.2 Concepts of standard state inputs & it's types 2.2.1 Step, Ramp, Parabolic & impulse concept. 2.3 Analysis of first & second order control systems, poles & zero concept. 2.3.1 Order of systems & its equations with numerical 2.3.2 First order system for unit step input , concept of time constant 2.3.3 second order system for unit step input , concept of time constant , concept ,definition 2.3.4 Time response specification – Tp , Ts & Tr details Time response specification – TD & Mp with numerical 2.4 Steady state analysis for type 0, type 1 & type 2 system 2.4.1 Steady state errors & error constants with numerical 2.5 Details of stable & astable systems , 2.5.1 concept of relative stability 2.6 Routh's stability criteria & steps	

1	A feedback control systems has the inherent capability that its parameter can be adjusted to alter both its transient and steady state responses.

	a) True				
	b) False				
	Answer: a				
	Explanation: Feedback's inherent capability is that its parameter can be adjusted to alter both transient and steady state responses as together they are referred to as time responses.				
2	Transient response analysis is done for_____ systems.				
	a) Unstable				
	b) Stable				
	c) Conditionally stable				
	d) Marginally stable				
	Answer: b				
	Explanation: In case the system happens to be unstable, we need not proceed with its transient response analysis.				
3	The input signals to control systems are not known fully ahead of time, the characteristics of control system which suddenly strain a control system are:				
	a) Sudden shock				
	b) Sudden change				
	c) Constant velocity and acceleration				
	d) All of the mentioned				
	Answer: d				
	Explanation: System dynamic behavior for analysis and design is therefore judged and compared under standard test signals.				
4	Standard test signals in control system are:				
	a) Impulse signal				
	b) Ramp signal				
	c) Unit step signal				
	d) All of the mentioned				
	Answer: d				
	Explanation: Standard test signals are impulse, ramp and unit step all of the above to test the dynamic behavior of the control system.				
5	The nature of transient response is revealed by _____				
	a) Sine wave				
	b) Cos wave				
	c) Tan wave				
	d) Test signals				
	Answer: d				
	Explanation: The nature is dependent on system poles not on the dynamic inputs.				
6	It is generally used to analyze the transient response to one of the standard test signals.				
	a) True				

	b) False				
	Answer: a				
	Explanation: For analyzing transient response mainly step is used and also other signals mainly ramp and parabolic are not used for this analysis but they are used for steady state analysis.				
7	Step signal is the signal whose values is :				
	a) 1 for all values greater than zero				
	b) Indeterminate at zero				
	c) It is zero for time less than zero				
	d) All of the mentioned				
	Answer: d				
	Explanation: Step signal is the signal whose value varies from zero to level in zero time.				
8	Ramp input :				
	a) Denotes constant velocity				
	b) Value increases linearly with time				
	c) It denotes constant velocity and varies linearly with time				
	d) It varies exponentially with time				
	Answer: c				
	Explanation: Ramp signal denotes constant velocity and also basic definition states that its value increases linearly with time.				
9	A perfect impulse has one value at zero time instant but otherwise zero elsewhere.				
	a) True				
	b) False				
	Answer: b				
	Explanation: A perfect impulse signal has infinite value at zero but mathematically only a small pulse is taken with finite limits.				
10	To find system's response by means of convolution integral _____ of the system is used.				
	a) Sum				
	b) Difference				
	c) Exponential				
	d) Weighing				
	Answer: d				
	Explanation: Impulse response of a system is the inverse Laplace transfer function of its Laplace function.				
11	First order system is defined as :				
	a) Number of poles at origin				
	b) Order of the differential equation				
	c) Total number of poles of equation				
	d) Total number of poles and order of equation				

	Answer: d				
	Explanation: First order system is defined by total number of poles and also which is same as the order of differential equation.				
12	A unit step is applied at t=0 to a first order system without time delay. The response has the value of 1.264 units at t=10 mins, and 2 units at steady state. The transfer function of the system is_____				
	a) 3/(1+600s)				
	b) 2/(1+500s)				
	c) 5/(1+220s)				
	d) 2/(1+600s)				
	Answer: d				
	Explanation: a(t)= k[1-e^-t/T] K=2				
	0.632= 1-e^-10/T				
	T=600 sec				
	G(s)=2/(1+600s).				
13	The transfer function of the system is G(s) =100/(s+1) (s+100). For a unit step input to the system the approximate settling time for 2% criterion is:				
	a) 100 sec				
	b) 4 sec				
	c) 1 sec				
	d) 0.01 sec				
	Answer: b				
	Explanation: G(s) =100/(s+1) (s+100)				
	Taking the dominant pole consideration,				
	S=-100 pole is not taken.				
	G(s)= 100/s+1				
	Now it is first order system, ts=4T=4 sec.				
14	A system with transfer function 1/Ts+1, subjected to a step input takes to seconds to reach 50% of step height. The value of t is :				
	a) 6.9s				
	b) 10s				
	c) 14.4s				
	d) 20s				
	Answer: c				
	Explanation: The response of a first order system is: A(t)=a[1-e^-t/T] ½= 1-e^-10/t T= 14.43 sec.				
15	Laplace transform of unit impulse signal is :				

	a) A/s				
	b) A				
	c) 1				
	d) 1/s				
	Answer: c				
	Explanation: Laplace response of impulse signal is one which implies Laplace response is systems response.				
16	Time response during steady state the output velocity matches with the input velocity but lags behind the input by T.				
	a) True				
	b) False				
	Answer: a				
	Explanation: In first order systems the time response during steady state the output velocity matches.				
17	Which of the following transfer function will have the greatest maximum overshoot?				
	a) 9/(s2+2s+9)				
	b) 16/(s2+2s+16)				
	c) 25/(s2+2s+25)				
	d) 36/(s2+2s+36)				
	Answer: d				
	Explanation: Comparing the characteristic equation with the standard equation the value of the damping factor is calculated and the value for the option d is minimum hence the system will have the maximum overshoot .				
18	The damping ratio and peak overshoot are measures of:				
	a) Relative stability				
	b) Speed of response				
	c) Steady state error				
	d) Absolute stability				
	Answer: b				
	Explanation: Speed of response is the speed at which the response takes the final value and this is determined by damping factor which reduces the oscillations and peak overshoot as the peak is less then the speed of response will be more.				
19	Find the type and order of the system given below:				
	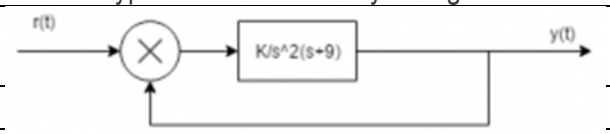				
	a) 2,3				
	b) 2,2				

	c) 3,3				
	d) None of the mentioned				
	Answer: b				
	Explanation: Type = 2 which is the number of poles at the origin and order is the highest power of the characteristic equation.				
20	A system has a complex conjugate root pair of multiplicity two or more in its characteristic equation. The impulse response of the system will be:				
	a) A sinusoidal oscillation which decays exponentially; the system is therefore stable				
	b) A sinusoidal oscillation with a time multiplier ; the system is therefore unstable				
	c) A sinusoidal oscillation which rises exponentially ; the system is therefore unstable				
	d) A dc term harmonic oscillation the system therefore becomes limiting stable				
	Answer: c				
	Explanation: Poles are the roots of the denominator of the transfer function and on imaginary axis makes the system stable but multiple poles makes the system unstable.				
21	What will be the nature of time response if the roots of the characteristic equation are located on the s-plane imaginary axis?				
	a) Oscillations				
	b) Damped oscillations				
	c) No oscillations				
	d) Under damped oscilaations				
	Answer: c				
	Explanation: complex conjugate (non-multiple): oscillatory (sustained oscillations)				
	Complex conjugate (multiple): unstable (growing oscillations).				
22	Which one of the following is the most likely reason for large overshoot in a control system?				
	a) High gain in a system				
	b) Presence of dead time delay in a system				
	c) High positive correcting torque				
	d) High retarding torque				
	Answer: c				
	Explanation: Large overshoot refers to the maximum peak in the response of the closed loop system and this is mainly due to the high positive correcting torque.				
23	In a second order feedback control system natural frequency and damping				
	a) Can be designed by changing the gain of the individual system				
	b) Cannot be designed by changing the gain of the individual system				
	c) Are independent on the type of input excitation				
	d) None of the mentioned				
	Answer: a				
	Explanation: Natural frequency and damping can be designed by changing the gain of the individual system.				

24	The transfer function of a system is G(s) = 100/(s+1) (s+100). For a unit step input to the system the approximate settling time for 2% criterion is:				
	a) 100 sec				
	b) 4 sec				
	c) 1 sec				
	d) 0.01 sec				
	Answer: b				
	Explanation: Comparing the equation with the characteristic equation and then finding the value of G and w and calculating the value of settling time as 4 sec from 4/Gw.				
25	Rise time, Peak time, maximum peak overshoot, settling time, and steady state error are mutually dependent.				
	a) True				
	b) False				
	Answer: a				
	Explanation: Rise time, peak time, settling time and maximum peak overshoot are the prime factors of the time domain analysis and they must be specified in a consistent manner but they are mutually dependent.				
26	Control system are normally designed to be:				
	a) Overdamped				
	b) Under damped				
	c) Un damped				
	d) Critically damped				
	Answer: b				
	Explanation: Practically there are some non-linearity present in the system as friction but in mathematical model these are considered by considering high gain and lower damping.				
27	Stability of a system implies that :				
	a) Small changes in the system input does not result in large change in system output				
	b) Small changes in the system parameters does not result in large change in system output				
	c) Small changes in the initial conditions does not result in large change in system output				
	d) All of the above mentioned				
	Answer: d				
	Explanation: Stability of the system implies that small changes in the system input, initial conditions, and system parameters does not result in large change in system output.				
28	A linear time invariant system is stable if :				
	a) System in excited by the bounded input, the output is also bounded				
	b) In the absence of input output tends zero				

	c) Both a and b				
	d) System in excited by the bounded input, the output is not bounded				
	Answer: c				
	Explanation: A system is stable only if it is BIBO stable and asymptotic stable.				
29	Asymptotic stability is concerned with:				
	a) A system under influence of input				
	b) A system not under influence of input				
	c) A system under influence of output				
	d) A system not under influence of output				
	Answer: b				
	Explanation: Asymptotic stability concerns a free system relative to its transient behavior.				
30	Bounded input and Bounded output stability notion concerns with :				
	a) A system under influence of input				
	b) A system not under influence of input				
	c) A system under influence of output				
	d) A system not under influence of output				
	Answer: a				
	Explanation: BIBO stability concerns with the system that has input present.				
31	If a system is given unbounded input then the system is:				
	a) Stable				
	b) Unstable				
	c) Not defined				
	d) Linear				
	Answer: c				
	Explanation: If the system is given with the unbounded input then nothing can be clarified for the stability of the system.				
32	Linear mathematical model applies to :				
	a) Linear systems				
	b) Stable systems				
	c) Unstable systems				
	d) Non-linear systems				
	Answer: b				
	Explanation: As the output exceeds certain magnitude then the linear mathematical model no longer applies.				
33	For non-linear systems stability cannot be determined due to:				
	a) Possible existence of multiple equilibrium states				
	b) No correspondence between bounded input and bounded output stability and asymptotic stability				
	c) Output may be bounded for the particular bounded input but may not be bounded for the bounded				

	inputs				
	d) All of the mentioned				
	Answer: d				
	Explanation: For non-linear systems stability cannot be determined as asymptotic stability and BIBO stability concepts cannot be applied, existence of multiple states and unbounded output for many bounded inputs.				
34	If the impulse response in absolutely integrable then the system is :				
	a) Absolutely stable				
	b) Unstable				
	c) Linear				
	d) Stable				
	Answer: a				
	Explanation: The impulse response must be absolutely integrable for the system to absolutely stable.				
35	The roots of the transfer function do not have any effect on the stability of the system.				
	a) True				
	b) False				
	Answer: b				
	Explanation: The roots of transfer function also determine the stability of system as they may be real, complex and may have multiplicity of various order.				
36	Roots with higher multiplicity on the imaginary axis makes the system :				
	a) Absolutely stable				
	b) Unstable				
	c) Linear				
	d) Stable				
	Answer: b				
	Explanation: Repetitive roots on the imaginary axis makes the system unstable.				
37	Roots on the imaginary axis makes the system :				
	a) Stable				
	b) Unstable				
	c) Marginally stable				
	d) Linear				
	Answer: c				
	Explanation: Roots on the imaginary axis makes the system marginally stable.				
38	If the roots of the have negative real parts then the response is _____				

	a) Stable				
	b) Unstable				
	c) Marginally stable				
	d) Bounded				
	Answer: d				
	Explanation: If the roots of the have negative real parts then the response is bounded and eventually decreases to zero.				
39	If root of the characteristic equation has positive real part the system is :				
	a) Stable				
	b) Unstable				
	c) Marginally stable				
	d) Linear				
	Answer: b				
	Explanation: The impulse response of the system is infinite when the roots of the characteristic equation has positive real part.				
40	A linear system can be classified as :				
	a) Absolutely stable				
	b) Conditionally stable				
	c) Unstable				
	d) All of the mentioned				
	Answer: d				
	Explanation: A system can be stable, unstable and conditionally stable also.				

41. A feedback control systems has the inherent capability that its parameter can be adjusted to alter both its transient and steady state responses.
a) True
b) False
Answer: a
Explanation: Feedback's inherent capability is that its parameter can be adjusted to alter both transient and steady state responses as together they are referred to as time responses.

42. Transient response analysis is done for_____ systems.

a) Unstable
b) Stable
c) Conditionally stable
d) Marginally stable
Answer: b
Explanation: In case the system happens to be unstable, we need not proceed with its transient response analysis.
43. The input signals to control systems are not known fully ahead of time, the characteristics of control system which suddenly strain a control system are:

a) Sudden shock
b) Sudden change
c) Constant velocity and acceleration
d) All of the mentioned
Answer: d
Explanation: System dynamic behavior for analysis and design is therefore judged and compared under standard test signals.

44. Standard test signals in control system are:
a) Impulse signal
b) Ramp signal
c) Unit step signal
d) All of the mentioned
Answer: d
Explanation: Standard test signals are impulse, ramp and unit step all of the above to test the dynamic behavior of the control system.

45. The nature of transient response is revealed by _____

a) Sine wave
b) Cos wave
c) Tan wave
d) Test signals
Answer: d.
Explanation: The nature is dependent on system poles not on the dynamic inputs.

46. .It is generally used to analyze the transient response to one of the standard test signals.

a) True
b) False
Answer: a
Explanation: For analyzing transient response mainly step is used and also other signals mainly ramp and parabolic are not used for this analysis but they are used for steady state analysis.

47. Step signal is the signal whose values is :

a) 1 for all values greater than zero
b) Indeterminate at zero
c) It is zero for time less than zero
d) All of the mentioned
Answer: d
Explanation: Step signal is the signal whose value varies from zero to level in zero time.

48. Ramp input :

a) Denotes constant velocity
b) Value increases linearly with time
c) It denotes constant velocity and varies linearly with time
d) It varies exponentially with time\
Answer: c

Explanation: Ramp signal denotes constant velocity and also basic definition states that its value increases linearly with time.

49. A perfect impulse has one value at zero time instant but otherwise zero elsewhere.

a) True
b) False
Answer: b
Explanation: A perfect impulse signal has infinite value at zero but mathematically only a small pulse is taken with finite limits.

50. To find system's response by means of convolution integral _____ of the system is used.

a) Sum
b) Difference
c) Exponential
d) Weighing
Answer: d
. Explanation: Impulse response of a system is the inverse Laplace transfer function of its Laplace function.

51. First order system is defined as :

a) Number of poles at origin
b) Order of the differential equation
c) Total number of poles of equation
d) Total number of poles and order of equation
Answer: d
Explanation: First order system is defined by total number of poles and also which is same as the order of differential equation.

52. A unit step is applied at t=0 to a first order system without time delay. The response has the value of 1.264 units at t=10 mins, and 2 units at steady state. The transfer function of the system is_____

a) 3/(1+600s)
b) 2/(1+500s)
c) 5/(1+220s)
d) 2/(1+600s)
Answer: d
Explanation: a(t)= k[1-e -t/T] K=2 0.632= 1-e -10/T T=600 sec G(s)=2/(1+600s).

53. The transfer function of the system is G(s) =100/(s+1) (s+100). For a unit step input to the system the approximate settling time for 2% criterion is:

a) 100 sec
b) 4 sec
c) 1 sec
d) 0.01 sec
Answer: b
Explanation: G(s) =100/(s+1) (s+100) Taking the dominant pole consideration, S=-100 pole is not taken. G(s)= 100/s+1 Now it is first order system, ts=4T=4 sec.

54. A system with transfer function 1/Ts+1, subjected to a step input takes to seconds to reach 50% of step height. The value of t is :

a) 6.9s
b) 10s
c) 14.4s
d) 20s Answer: c

Explanation: The response of a first order system is: A(t)=a[1-e^-t/T] ½= 1-e^-10/t T= 14.43 sec.

55. A first order system and its response to a unit step input are shown in figure below. The system parameters are_____

a) a=5 and k=12
b) a=10 and k=5
c) a=5 and k=10
d) a=8 and k=9
Answer: c
Explanation: time constant=0.2 sec. 1/a=0.2 a=5 final value=lim sC(s) =K/a K/a=2 K=10.

56. Assertion (A): It is observed that step function is first derivative of a ramp function and impulse function is first derivative of a step function. Reason (R): From the derived time response expression it is concluded that the output time response also follows the same sequence as that of input functions.

a) Both A and R are true and R is the correct explanation of A
b) Both A and R are true but R is not correct explanation of A
c) Both A is True but R is false
d) Both A is False but R is true
Answer: b
Explanation: If response due to one standard signal is known then response due to other signals can also be derived.

57. Laplace transform of unit impulse signal is :

a) A/s
b) A
c) 1
d) 1/s
Answer: c
Explanation: Laplace response of impulse signal is one which implies Laplace response is systems response.

58. Time response during steady state the output velocity matches with the input velocity but lags behind the input by T.

a) True
b) False
Answer: a
Explanation: In first order systems the time response during steady state the output velocity matches

59. What will be the nature of time response if the roots of the characteristic equation are located on the s-plane imaginary axis?

a) Oscillations
b) Damped oscillations
c) No oscillations
d) Under damped oscilaations
Answer: c
Explanation: complex conjugate (non-multiple): oscillatory (sustained oscillations) Complex conjugate (multiple): unstable (growing oscillations).

60. Consider a system with transfer function G(s) = s+6/Ks2+s+6. Its damping ratio will be 0.5 when the values of k is:

a) 2/6
b) 3
c) 1/6
d) 6
Answer: c
Explanation: s+6/K[s2+s/K+6/K] Comparing with s2+2Gw+w2 w= √6/K 2Gw=1/K 2*0.5*√6/K =1/K K=1/6.

61. The output in response to a unit step input for a particular continuous control system is c(t)= 1-e-t. What is the delay time Td?
a) 0.36
b) 0.18
c) 0.693
d) 0.289
Answer: c
Explanation: The output is given as a function of time. The final value of the output is limn- >∞c(t)=1; . Hence Td (at 50% of the final value) is the solution of 0.5=1-e-Td, and is equal to ln 2 or 0.693 sec.

62. Which one of the following is the most likely reason for large overshoot in a control system?

a) High gain in a system
b) Presence of dead time delay in a system
c) High positive correcting torque
d) High retarding torque
Answer: c
Explanation: Large overshoot refers to the maximum peak in the response of the closed loop system and this is mainly due to the high positive correcting torque.

63. For the system 2/s+1, the approximate time taken for a step response to reach 98% of its final value is:

a) 1s
b) 2s
c) 4s
d) 8s
Answer: c
Explanation: C(s)/R(s) = 2/s+1 R(s) = 1/s (step input) C(s) = 2/s(s+1) c(t) = 2[1-e-t] 1.96 = 2[1-e-T] T= 4sec.

64. The unit step response of a second order system is = 1-e-5t-5te-5t . Consider the following statements: 1. The under damped natural frequency is 5 rad/s. 2. The damping ratio is 1. 3. The impulse response is 25te-5t. Which of the statements given above are correct?

a) Only 1 and 2
b) Only 2 and 3
c) Only 1 and 3
d) 1,2 and 3
Answer: d
Explanation: C(s) = 1/s-1/s+5-5/(s+5)^2 C(s) = 25/s(s2+10s+25) R(s) = 1/s G(s) = 25/(s2+10s+25) w= √25 w = 5 rad/sec G = 1.

65. The loop transfer function of controller Gc(s) is :

a) 1+0.1s/s
b) -1+0.1s/s
c) –s/s+1
d) s/s+1
Answer: a
Explanation: The transfer function of the controller is 0.1s+1/s Gc(s) = 0.1s+1/s.

66. The peak percentage overshoot of the closed loop system is :

a) 5.0%
b) 10.0%
c) 16.3%
d) 1.63% Answer: c
Explanation: C(s)/R(s) = 1/s2+s+1 C(s)/R(s) = w/ws2+2Gws+w2 Compare both the equations, w = 1 rad/sec 2Gw = 1 Mp = 16.3 %

67. Consider a second order all-pole transfer function model, if the desired settling time(5%) is 0.60 sec and the desired damping ratio 0.707, where should the poles be located in s-plane?

a) -5+j4√2
b) -5+j5
c) -4+j5√2
d) -4+j7
Answer: b
Explanation: G = 1/√2 Gw = 5 s = -5+j5.

68. Which of the following quantities give a measure of the transient characteristics of a control system, when subjected to unit step excitation. 1. Maximum overshoot 2. Maximum undershoot 3. Overall gain 4. Delay time 5. Rise time 6. Fall time

a) 1,3 and 5
b) 2, 4 and 5
c) 2,4 and 6
d) 1,4 and 5
Answer: d
Explanation: Maximum overshoot, rise time and delay time are the major factor of the transient behaviour of the system and determines the transient characteristics.

69. Which of the following transfer function will have the greatest maximum overshoot?

a) 9/(s +2s+9)
b) 16/(s +2s+16)
c) 25/(s +2s+25)
d) 36/(s +2s+36)
Answer: d

Explanation: Comparing the characteristic equation with the standard equation the value of the damping factor is calculated and the value for the option d is minimum hence the system will have the maximum overshoot .

70. Let c(t) be the unit step response of a system with transfer function K(s+a)/(s+K). If c(0+) = 2 and c(∞) = 10, then the values of a and K are respectively.

a) 2 and 10
b) -2 and 10
c) 10 and 2
d) 2 and -10
Answer: c
Explanation: Applying initial value theorem which state that the initial value of the system is at time t =0 and this is used to find the value of K and final value theorem to find the value of a.

71. The damping ratio and peak overshoot are measures of:

a) Relative stability
b) Speed of response
c) Steady state error
d) Absolute stability
Answer: b
Explanation: Speed of response is the speed at which the response takes the final value and this is determined by damping factor which reduces the oscillations and peak overshoot as the peak is less then the speed of response will be more.

72. A system has a complex conjugate root pair of multiplicity two or more in its characteristic equation. The impulse response of the system will be:

a) A sinusoidal oscillation which decays exponentially; the system is therefore stable
b) A sinusoidal oscillation with a time multiplier ; the system is therefore unstable
c) A sinusoidal oscillation which rises exponentially ; the system is therefore unstable
d) A dc term harmonic oscillation the system therefore becomes limiting stable
Answer: c
Explanation: Poles are the roots of the denominator of the transfer function and on imaginary axis makes the system stable but multiple poles makes the system unstable.

73. Find the initial and final values of the following function: F(s) = 12(s+1)/s(s+2)^2(s+3)

a) 1,∞
b) 0,∞
c) ∞,1
d) 0,1
Answer: d
Explanation: Using final and initial values theorem directly to find initial and final values but keeping in mind that final value theorem is applicable for stable systems only.

74. The step response of the system is c(t) = 10+8e -4/8e . The gain in time constant form of transfer function will be:

a) -7
b) 7
c) 7.5
d) -7.5
Answer: d

Explanation: Differentiating the equation and getting the impulse response and then taking the inverse Laplace transform and converting the form into time constant form we get K = -7.5.

75. The standard second order system to a unit step input shows the 0.36 as the first peak undershoot, hence its second overshoot is:

a) 0.135
b) 0.216
c) 0.1296
d) 0.116
Answer: b
Explanation: Overshoot and undershoot are calculated from the formula of peak time as odd peaks denote the overshoot and even denotes the under shoot.

76. Consider the input with the inputs 4 u(t) and the impulse response 5 +7 , the time constants of the output are,

a) 0.2, 0.33 and 0.5
b) 4.5 and 7
c) 0.2, 0.4 and 0.7
d) 0.2, 0.1 and 0.25
Answer: a
Explanation: Output response so calculated is the inverse Laplace transform of the input and impulse response and hence converting the resultant form in the time constant form time constant can be directly determined.

77. In a second order feedback control system natural frequency and damping

a) Can be designed by changing the gain of the individual system
b) Cannot be designed by changing the gain of the individual system
c) Are independent on the type of input excitation
d) None of the mentioned
Answer: a
Explanation: Natural frequency and damping can be designed by changing the gain of the individual system

78. Undamped natural frequency of a second order system has the following influence on the response due to various excitations:

a) Increase in speed of response and decrease sensitivity
b) Decrease in speed of response and increase sensitivity
c) Has no influence in the dynamic response
d) Increase oscillatory behavior
Answer: a

Explanation: Undamped natural frequency is the frequency that has suffered damping and gets affected by the increase in the speed of response and decrease in sensitivity.

79. Normalized response of a dynamic system refers to:

a) Characteristic feature of a response due to specific excitation irrespective of its amplitude
b) Response of dynamic system divided by its maximum value
c) Response of dynamic system divided by a standard value
d) None of the mentioned
Answer: a

Explanation: Normalization refers to the desired to the reference value and normalized response of the dynamic system refers to the characteristic feature of a response due to specific excitation irrespective of its amplitude.

80. The transfer function of a system is G(s) = 100/(s+1) (s+100). For a unit step input to the system the approximate settling time for 2% criterion is:

a) 100 sec
b) 4 sec
c) 1 sec
d) 0.01 sec
Answer: b Explanation: Comparing the equation with the characteristic equation and then finding the value of G and w and calculating the value of settling time as 4 sec from 4/Gw.

81. The characteristic equation of a control system is s(s2+ 6s+13)+K=0. The value of k such that the characteristic equation has a pair of complex roots with real part -1 will be :

a) 10
b) 20
c) 30
d) 40 Answer: b
Explanation: The characteristic equation is considered and the values of G and w are calculated and further the value of k can be calculated.

82. Normalized difference between the time response peak and steady state output is _____

a) Maximum peak overshoot
b) Damping factor
c) Minimum peak overshoot
d) Undershoot
Answer: a
Explanation: Maximum peak overshoot is the normalized difference between the time response peak and steady state output.

83. Rise time, Peak time, maximum peak overshoot, settling time, and steady state error are mutually dependent.

a) True
b) False
Answer: a

Explanation: Rise time, peak time, settling time and maximum peak overshoot are the prime factors of the time domain analysis and they must be specified in a consistent manner but they are mutually dependent.

84. Control system are normally designed to be:

a) Overdamped
b) Under damped
c) Un damped
d) Critically damped
Answer: b
Explanation: Practically there are some non-linearity present in the system as friction but in mathematical model these are considered by considering high gain and lower damping.

85. The steady state error for a unity feedback system for the input r(t) to the system G(s) = K(s+2)/s(s3+7s2+12s) is 6R/K. The input r (t) is _____

a) Rt2/2
b) Rt3/2
c) Rt5/2
d) Rt7/2
Answer: a
Explanation: Ka = 2K/12 = K/6. Ess = 6R/K. So, as we take Rt2/2 we get 6R/K as the error. The other options can't be true because the input is exceeding the desired input. It is inversely proportional to the gain.

86. The ramp input is applied to a unity feedback system with type number 1 and zero frequency 20. What is the percentage of steady state error?

a) 1%
b) 2%
c) 5%
d) 9%
Answer: c

Explanation: Steady state error is the error calculated between the final output and desired output and the error must be less and this steady state error is inversely proportional to gain. Here unity feedback system is given with zero frequency 20 so we take 1/20th part and the answer comes as 5%.

87. A unit integrator is applied to a modified system along with a ramp input. The modified value of the steady state error is 0.25. What was the initial value?

a) 0.05
b) 0.1
c) 0.15
d) 0.2
Answer: d
Explanation: The integrator is similar to the phase lag systems and it is used to reduce or eliminate the steady state error and when it is cascaded with the ramp input. We know that when unit integrator is applied with a ramp input the steady state error will automatically increase but here we wanted the initial value which will be obviously less than the modified steady state error and by the same proportion.

88. Systems of type higher than 1 are not employed in practice.

a) True
b) False
Answer: b
Explanation: Systems of type higher than 2 are not employed in practice as they're difficult to stabilize and dynamic error increases. Systems of type 2 or lower are already stable and has less dynamic error.

89. The initial response when output is not equal to input is _____

a) Error response
b) Transient response
c) Dynamic response
d) Static response
Answer: b
Explanation: The response is not long last lasting and real, so it is a transient response. It can't be a static or dynamic response as the output doesn't match the input and also there's no chance of error response.

90. The steady state error for a unit step input is _____

a) 1/kp
b) 1/(1-kp)
c) 1/2kp
d) 1/(1+kp)
Answer: d
Explanation: R(s) =1/s for unit step and for the transfer function whose limit tends to zero, it is 1/1+kp. We use Laplace and Inverse Laplace Transform to calculate the same.

91. For a unity feedback system, the open loop transfer function is G(s) = K(s+2)/s2 (s2+7s+12). What is the type of system?

a) One
b) Two
c) Three
d) Four
Answer: b
Explanation: As in the numerator it is mentioned K(s+2) so we got two poles in the open loop transfer function at the origin. For a given transfer function we calculate poles and zeros and the number of poles determine the type of the system.

92. The For a unity feedback system the open loop transfer function is G(s) = K(s+2)/s2 (s2+7s+12). What is the value of Ka?

a) 12/k
b) k/12
c) k/6
d) 6/k
Answer: c

Explanation: As limit s tends to zero : s2G(s) = K(s+2)/ (s2+7s+12) = k/6. Ka is the acceleration error constant which is calculated by the above method.

93. For a system whose transfer function is G(s) =10/s (1+s), what are the dynamic error coefficients k2 & k3 respectively as k1 is infinity?

a) 11, 10.1
b) 10.1, 11
c) 10, 11.1
d) 9, 10.1
Answer: c

Explanation: We should compare it with E(s)/R(s) = 1/k1+1/k2s+1/k3s2. G(s) = 10/s(1+s) is compared with the above equation which is the parent equation for calculating dynamic error constants where k1 comes as infinity and K2, K3 takes the value of 10 & 11.1 respectively.

94. The Laplace transform of a parabolic signal is _____

a) 1
b) A/s3
c) A/s2
d) A/s
Answer: a
Explanation: As u(t) is a unity step function r(t)=0;t

95. Which of the following is not the correct reason to select feedback compensation over cascaded one?

a) No amplification is required as the energy transfer is from higher to lower level.
b) Suitable devices are not available for compensation(series)
c) It is economical
d) Provides greater stiffness against load disturbances
Answer: c
Explanation: Feedback compensation is the compensation obtained due to feedback and cascade refers to the cascading of blocks in the forward path and feedback compensation is not preferred over cascading as it is ecenomical.

96. Operations performed by electronic controllers:

a) Flexible operations
b) High torque high speed operations
c) Fire and explosion proof operation
d) All of the mentioned
Answer: a
Explanation: Electronic controllers are the most flexible controller and used over hydraulic and pneumatic controllers and they use the control action where the control is mainly handled by electronic components and can perform flexible operations as of high speed and high torque.

97. Stability of a system implies that :

a) Small changes in the system input does not result in large change in system output
b) Small changes in the system parameters does not result in large change in system output
c) Small changes in the initial conditions does not result in large change in system output

d) All of the above mentioned
Answer: d
Explanation: Stability of the system implies that small changes in the system input, initial conditions, and system parameters does not result in large change in system output.

98. A linear time invariant system is stable if :

a) System in excited by the bounded input, the output is also bounded
b) In the absence of input output tends zero
c) Both a and b
d) System in excited by the bounded input, the output is not bounded
Answer: c
Explanation: A system is stable only if it is BIBO stable and asymptotic stable.

99. Asymptotic stability is concerned with:
a) A system under influence of input
b) A system not under influence of input
c) A system under influence of output
d) A system not under influence of output Answer: b
Explanation: Asymptotic stability concerns a free system relative to its transient behavior.

100. Bounded input and Bounded output stability notion concerns with :

a) A system under influence of input
b) A system not under influence of input
c) A system under influence of output
d) A system not under influence of output
Answer: a
Explanation: BIBO stability concerns with the system that has input present.

101. . If a system is given unbounded input then the system is:

a) Stable
b) Unstable
c) Not defined
d) Linear
Answer: c
Explanation: If the system is given with the unbounded input then nothing can be clarified for the stability of the system.

102. Linear mathematical model applies to :

a) Linear systems
b) Stable systems
c) Unstable systems
d) Non-linear systems
Answer: b

Explanation: As the output exceeds certain magnitude then the linear mathematical model no longer applies

103. For non-linear systems stability cannot be determined due to:

a) Possible existence of multiple equilibrium states
b) No correspondence between bounded input and bounded output stability and asymptotic stability
c) Output may be bounded for the particular bounded input but may not be bounded for the bounded inputs
d) All of the mentioned
Answer: d
Explanation: For non-linear systems stability cannot be determined as asymptotic stability and BIBO stability concepts cannot be applied, existence of multiple states and unbounded output for many bounded inputs.

104. If the impulse response in absolutely integrable then the system is :

a) Absolutely stable
b) Unstable
c) Linear
d) Stable
Answer: a
Explanation: The impulse response must be absolutely integrable for the system to absolutely stable.

105. The roots of the transfer function do not have any effect on the stability of the system.

a) True
b) False
Answer: b
Explanation: The roots of transfer function also determine the stability of system as they may be real, complex and may have multiplicity of various order.

106. Roots with higher multiplicity on the imaginary axis makes the system :

a) Absolutely stable
b) Unstable
c) Linear
d) Stable
Answer: b
Explanation: Repetitive roots on the imaginary axis makes the system unstable.

107. Roots on the imaginary axis makes the system :

a) Stable
b) Unstable
c) Marginally stable
d) Linear
Answer: c
Explanation: Roots on the imaginary axis makes the system marginally stable.

108. If the roots of the have negative real parts then the response is _____

a) Stable

b) Unstable
c) Marginally stable
d) Bounded
Answer: d
Explanation: If the roots of the have negative real parts then the response is bounded and eventually decreases to zero.

109. If root of the characteristic equation has positive real part the system is :

a) Stable
b) Unstable
c) Marginally stable
d) Linear
Answer: b
Explanation: The impulse response of the system is infinite when the roots of the characteristic equation has positive real part.

110. A linear system can be classified as :

a) Absolutely stable
b) Conditionally stable
c) Unstable
d) All of the mentioned
Answer: d
Explanation: A system can be stable, unstable and conditionally stable also.

111. _____ is a quantitative measure of how fast the transients die out in the system.

a) Absolutely stable
b) Conditionally stable
c) Unstable
d) Relative Stability
Answer: d
Explanation: Relative Stability may be measured by relative settling times of each root or pair of roots.

112. Routh Hurwitz criterion gives:

a) Number of roots in the right half of the s-plane
b) Value of the roots
c) Number of roots in the left half of the s-plane
d) Number of roots in the top half of the s-plane
Answer: a
Explanation: Routh Hurwitz criterion gives number of roots in the right half of the splane

113. Routh Hurwitz criterion cannot be applied when the characteristic equation of the system containing coefficient's which is/are

a) Exponential function of s
b) Sinusoidal function of s
c) Complex
d) Exponential and sinusoidal function of s and complex

Answer: d
Explanation: Routh Hurwitz criterion cannot be applied when the characteristic equation of the system containing coefficient/s which is/are exponential, sinusoidal and complex function of s.

114. Consider the following statement regarding Routh Hurwitz criterion:

a) It gives absolute stability
b) It gives gain and phase margin
c) It gives the number of roots lying in RHS of the s-plane
d) It gives gain, phase margin and number of roots lying in RHS of the s-plane
Answer: d
Explanation: Routh Hurwitz gives the absolute stability and roots on the right of the s plane.

115. Which of the test signals are best utilized by the stability analysis.

a) Impulse
b) Step
c) Ramp
d) Parabolic
Answer: a

Explanation: Computational task is reduced to much extent

116. The characteristic equation of a system is given as3s4+10s3+5s2+2=0. This system is :

a) Stable
b) Marginally stable
c) Unstable
d) Linear
Answer: c
Explanation: There is a missing coefficient so the system is unstable.

117. The characteristic equation of a system is given ass3+25s2+10s+50=0. What is the number of the roots in the right half s-plane and the imaginary axis respectively?

a) 1,1
b) 0,0
c) 2,1
d) 1,2
Answer: b
Explanation: The characteristic equation has no sign changes so number of roots on the right half of s plane is zero.

118. Consider the following statement:

a) A system is said to be stable if its output is bounded for any input

b) A system is said to be stable if all the roots of the characteristic equation lie on the left half of the s plane.
c) A system is said to be stable if all the roots of the characteristic equation have negative real parts.
d) A second order system is always stable for finite values of open loop gain
Answer: a
Explanation: A system is stable if its output is bounded for bounded input.

119. The necessary condition for the stability of the linear system is that all the coefficients of characteristic equation 1+G(s)H(s) =0, be real and have the :
a) Positive sign
b) Negative sign
c) Same sign
d) Both positive and negative
Answer: c
Explanation: The necessary condition for the stability of the linear system is that all the coefficients of characteristic equation 1+G(s)H(s) =0, is they must have same sign.

120. For making an unstable system stable:
a) Gain of the system should be increased
b) Gain of the system should be decreased
c) The number of zeroes to the loop transfer function should be increased
d) The number of poles to the loop transfer function should be increased
Answer: b
Explanation: For making an unstable system stable gain of the system should be decreased.

121. A system with unity feedback having open loop transfer function as G(s) = K(s+1)/s3+as2+2s+1. What values of 'K' and 'a' should be chosen so that the system oscillates ?
a) K =2, a =1
b) K =2, a =0.75
c) K =4, a =1
d) K =4, a =0.75
Answer: b
Explanation: Solving Routh Hurwitz table whenever row of zero occurs, the roots are located symmetrically on the imaginary axis then the system response oscillates, a =1+K/2+K. If K =2 is consider then a =0.75.

122. The open loop transfer functions with unity feedback are given below for different systems. Among these systems the unstable system is

a) G(s) =2/s+2
b) G(s) =2/s(s+2)
c) G(s) =2/(s+2)s^2
d) G(s) =2(s+1)/s(s+2)
Answer: c
Explanation: 1+2/s^2(s+2) =0. The coefficient of's' is missing. Hence the system is unstable.

123. Determine the stability of closed loop control system whose characteristic equation is s5+s4+2s3+2s2+11s+10=0.
a) Stable
b) Marginally stable

c) Unstable
d) None of the mentioned
Answer: b
Explanation: By Routh array s =0 and s =+j. It is having a pair of conjugate root lying on imaginary axis. System is marginally stable.

124. Determine the condition for the stability of unity feedback control system whose open loop transfer function is given by G(s) = 2e-st/s(s+2)
a) T >1
b) T 0
Answer: c
Explanation: G(s) =2(1-sT)/s(s+2) By Routh array analysis, for stable system, all the elements of first column need to be positive T<1

125. Consider a negative feedback system where G(s) =1/(s+1) and H(s) =K/s(s+2). The closed loop system is stable for
a) K>6
b) 0<K<6
Answer: d
Explanation: Using Routh array, for stability k

126. The characteristic equation of a feedback control system is s3+Ks2+9s+18. When the system is marginally stable, the frequency of the sustained oscillation:

a) 1
b) 1.414
c) 1.732
d) 3
Answer: d
Explanation: Solve using Routh array and for the system to be marginally stable, K = -2. Polynomial for sustained oscillation w = 3 rad/s.

127. Consider a characteristic equation, s4+3s3+5s2+6s+k+10=0. The condition for stability is

a) K>5
b) -10-4
d) -10<K<-4
Answer: d
Explanation: Solve Roth array for the system stable, -10<K<4.

128. The polynomial s4+Ks3+s2+s+1=0 the range of K for stability is _____

a) K>5
b) -10-4
d) K-1>0
Answer: d
Explanation: Solving using Routh array we get K-1>0 and is always negative for K>1.

129. The characteristic equation of a system is given by3s4+10s3+5s2+2=0. This system is:

a) Stable

b) Marginally stable
c) Unstable
d) Linear
Answer: c
Explanation: There is missing coefficient so system is unstable.

130. Which one of the following statements is not correct?
a) Root loci can be used for analyzing stability and transient performance
b) Root loci provide insight into system stability and performance
c) Shape of the root locus gives idea of type of controller needed to meet design specification
d) Root locus can be used to handle more than one variable at a time
Answer: d
Explanation: For more than one variable state space is used.

131. Root locus of s(s+2)+K(s+4) =0 is a circle. What are the coordinates of the center of this circle?
a) -2,0
b) -3,0
c) -4,0
d) -5,0
Answer: c
Explanation: s(s+2)+K(s+4) =0 1+K(s+4)/s(s+2) =0

G(s)H(s) =K(s+b)/s(s+a) Centre =(-b,0) =(-4,0)

132. The main objective of drawing root locus plot is :

a) To obtain a clear picture about the open loop poles and zeroes of the system
b) To obtain a clear picture about the transient response of feedback system for various values of open loop gain K c) To determine sufficient condition for the value of 'K' that will make the feedback system unstable
d) Both b and c
Answer: d
Explanation: The main objective of drawing root locus plot is to obtain a clear picture about the transient response of feedback system for various values of open loop gain K and to determine sufficient condition for the value of 'K' that will make the feedback system unstable.

133. If the output of control system for an input varies with respect to time, then it is called the?

A. design specifications
B. time response
C. performance indices
D. All of the above

Ans : B

Explanation: If the output of control system for an input varies with respect to time, then it is called the time response of the control system.

134. The time response consists of _____ parts.

A. 2
B. 3
C. 4
D. 5

Ans : A

Explanation: The time response consists of two parts : Transient response and Steady state response

135. Time response c(t) equal to?

A. the transient response - the steady state response
B. the transient response / the steady state response
C. the transient response * the steady state response
D. the transient response + the steady state response

Ans : D

Explanation: Time response c(t) equal to the transient response + the steady state response.

136. The response of the control system during the transient state is known as?

A. steady state response
B. final state response
C. transient response
D. None of the above

Ans : C

Explanation: The response of the control system during the transient state is known as transient response.

137. The transient response will be _____ for large values of t.

A. 1
B. -1
C. 0
D. infinite

Ans : C

Explanation: The transient response will be zero for large values of t.

138. Standard test signals are used to know the performance of the control systems using time response of the output.

A. TRUE
B. FALSE
C. Can be true or false
D. Can not say

Ans : A

Explanation: True, standard test signals are used to know the performance of the control systems using time response of the output.

139. First order system is defined as :

A. Number of poles at origin
B. Order of the differential equation
C. Total number of poles of equation
D. Total number of poles and order of equation

Ans : D

Explanation: First order system is defined by total number of poles and also which is same as the order of differential equation.

140. The system in originally critically damped if the gain is doubled the system will be :

A. Remains same
B. Under damped
C. Overdamped
D. None of the above

Ans : B

Explanation: The system in originally critically damped if the gain is doubled the system will be Under damped.

141. What will be the nature of time response if the roots of the characteristic equation are located on the s-plane imaginary axis?

A. Oscillations
B. Damped oscillations
C. No oscillations
D. Under damped oscilaations

Ans : C

Explanation: complex conjugate (non-multiple): oscillatory (sustained oscillations)
Complex conjugate (multiple): unstable (growing oscillations).

142. The unit impulse signal exists only at t is equal to zero.

A. TRUE
B. FALSE
C. Can be true or false
D. Can not say

Ans : A

Explanation: True, the unit impulse signal exists only at t is equal to zero.

143. A system is said to be stable, if its _____ is under control.

A. input
B. output
C. Both A and B
D. None of the above

Ans : B

Explanation: A system is said to be stable, if its output is under control.

144. A _____ produces a bounded output for a given bounded input.

A. unistable system
B. unstable system
C. stable system
D. multistable system

Ans : C
Explanation: A stable system produces a bounded output for a given bounded input.

145. If the output is not under control then it is said to be?

A. unistable
B. dual stable
C. non-stable
D. unstable

Ans : D

Explanation: If the output is not under control then it is said to be unstable.

146. How many Types of Systems based on Stability?

A. 1
B. 2
C. 3
D. 4

Ans : C
Explanation: We can classify the systems based on stability as follows : Absolutely stable system, Conditionally stable system and Marginally stable system

147. If the system is stable for a certain range of system component values, then it is known as?

A. Absolutely Stable System
B. Conditionally stable system
C. Marginally stable system
D. None of the above

Ans : B

Explanation: If the system is stable for a certain range of system component values, then it is known as conditionally stable system

148. A linear time invariant system is stable if :

A. System in excited by the bounded input, the output is also bounded
B. In the absence of input output tends zero
C. System in excited by the bounded input, the output is not bounded
D. Both A and B

Ans : D

Explanation: A system is stable only if it is BIBO stable and asymptotic stable.

149. Asymptotic stability is concerned with:

A. A system under influence of input
B. A system not under influence of input
C. A system under influence of output
D. A system not under influence of output

Ans : B

Explanation: Asymptotic stability concerns a free system relative to its transient behavior

150. If a system is given unbounded input then the system is:

A. unstable
B. stable
C. not defined
D. linear

Ans : C

Explanation: If the system is given with the unbounded input then nothing can be clarified for the stability of the system.

151. If the system is stable by producing an output signal with constant amplitude and constant frequency of oscillations for bounded input, then it is known as marginally stable system

A. TRUE
B. FALSE
C. Can be true or false
D. Can not say

Ans : A

Explanation: True, If the system is stable by producing an output signal with constant amplitude and constant frequency of oscillations for bounded input, then it is known as marginally stable system.

152. If the system is stable for all the range of system component values, then it is known as the absolutely stable system.

A. TRUE
B. FALSE
C. Can be true or false
D. Can not say

Ans : A

Explanation: True, If the system is stable for all the range of system component values, then it is known as the absolutely stable system.

153. Find the function f(t) for the following function F(s):

$$F(s) = \frac{1}{s(s+1)(s+5)}$$

a. $0.25e^{-t}+0.05e^{-5t}$
b. $-0.2-0.25e^{-t}+0.05e^{-5t}$
c. $-0.2+0.25e^{-t}+0.05e^{-5t}$
d. $0.25e^{-5t}+0.05e^{-t}$

Answer: (b) $-0.2-0.25e^{-t}+0.05e^{-5t}$

Explanation: The given function can be written as:

$$F(s) = \frac{1}{s(s+1)(s+5)} = A/s + B/(s+1) + C/(s+5)$$

1 = A(s+1)(s+5) +Bs(s+5) +Cs(s+1)

To calculate the value of A, put s= 0, we get:

1 = A(1)(5)

A = 1/5 = 0.2

Now, to calculate the value of B, put s=-1, we get:

1 = B (-1)(4)

B = -1/4 = -0.25

Similarly, put s=-5, we get:

1 = C (-5) (-4)

C = 1/20 = 0.05

Substituting the value of A, B, and C in F(s), we get:

F(s) = A/s + B/ (s+1) + C/(s+5)

F(s) = 0.2/s - 0.25/ (s+1) + 0.05/(s+5)

We know, Laplace transform of 1/(s + a) = $e^{-at}$and 1/s = 1.

f(t) = -0.2-0.25e^{-t}+0.05e^{-5t}

Hence the correct answer is option (b).

154. Determine the transfer function of the given system:

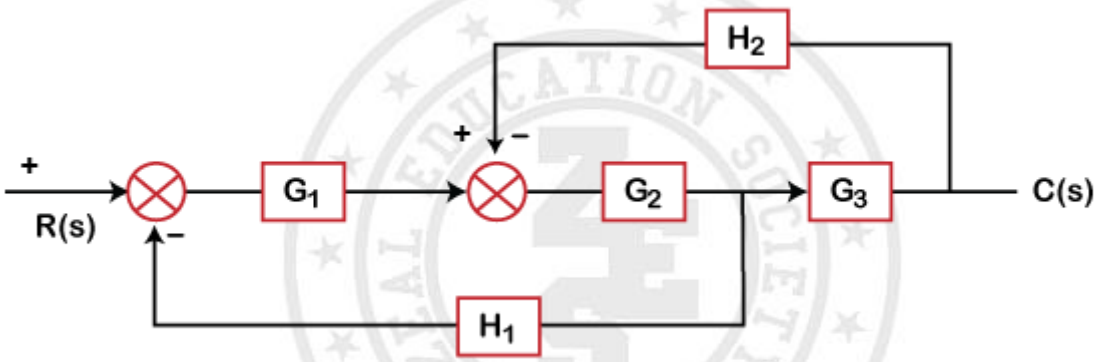

a. G1G2G3/ (1 + H2G2G3 + G2G1H1)
b. G1 G2G3/ (1 + G1G2G3H2H1)
c. G1G2G3 / (1 + G1G2G3H1 + G1G2G3H2)
d. G1G2G3 / (1 + G1G2G3H1)

Answer: (a)

Explanation: We will first shift the H1 block after G3

The shifting of a take-off point will make the block as: H1/ G3

Block G2 and G3 are in cascade. The equivalent block will be the product of these two (G2G3).

The gain for that block will be:

G2G3/ (1 + H2G2G3)

As shown, G1 is in cascade, the transfer function of the above system will be:

C(s)/R(s) = [G1G2G3/ (1 + H2G2G3)]/ [1 + G1G2G3/ (1 + H2G2G3) x H1/G3

C(s)/R(s) = G1G2G3/ (1 + H2G2G3 + G2G1H1)

Hence, the correct answer is an option (a).

155. The transfer function of a system is given as 81/ (s^2 + 16s + 81). Find the undamped natural frequency, damping ratio, and peak time for a unit step input.

a. 9, 0.889, 0.762
b. 9, 0.559, 0.762
c. 9, 0.889, 0.187
d. 9, 0.667, 0.187

Answer: (a) 9, 0.889, 0.762

Explanation: The standard transfer function can be written as:

$$\frac{Y(s)}{X(s)} = K\,\omega_n^2/(s|2 + 2\omega_n\delta s + \omega_n^2)$$

The given equation is: 81/ (s^2 + 16s + 81)

Comparing the values, we get:

K= 1

ω_n^2 = 81

$\omega_n = 9$ Radians / s

$$2\omega_n\delta = 16$$

$$\delta = \frac{16}{18} = 0.889$$

Thus, the undamped natural frequency is 9, and the damping ratio is 0.889.

The Peak time can be calculated as:

$$Tp = \frac{\pi}{\omega_d}$$

$$\omega_d = \omega_n\sqrt{(1-\delta^2)}$$

$$\omega_d = 4.12$$

$$Tp = \frac{\pi}{4.12}$$

$$Tp = 0.762$$

Hence, the correct answer is an option (a).

156. The closed loop transfer function for a second order system is: T(s) = 4/ (s^2 + 4s + 4). Calculate the settling time for a 2 percent and 5 percent band.

a. 5, 2.0
b. 0, 10.0
c. 0, 1.5
d. 0, 2.0

Answer: (c) 2.0, 1.5

Explanation: The standard transfer function can be written as:

$$\frac{Y(s)}{X(s)} = K\,\omega_n^2/(s|2 + 2\omega_n\delta s + \omega_n^2)$$

The given equation is: 4/ (s^2 + 4s + 4)

Comparing the values, we get:

K= 1

$$\omega_n^2 = 4$$

$$\omega_n = 2 \text{ Radians / s}$$

$$2\omega_n\delta = 4$$

$$\delta = 1$$

The settling time for a 2 percent band is calculated as:

$$Ts = \frac{4}{\delta\omega_n}$$

$$Ts = \frac{4}{2}$$

Settling time = 2 seconds

The settling time for a 5 percent band is calculated as:

$$Ts = \frac{3}{\delta\omega_n}$$

$$Ts = \frac{3}{2}$$

Settling time = 1.5 seconds

Hence, the correct answer is an option (c).

157. Consider a system with transfer function G(s) = (s + 4)/ (ks^2 + s + 4). The value of damping ratio will be 0.5 when the value of k is:

a. ½
b. ¼
c. 8
d. 4

Answer: (b) ¼

Explanation: The given transfer function is:

G(s) = (s + 4)/ (ks^2 + s + 4)

The characteristic equation ks^2 + s + 4 = 0

Dividing the equation by k, we get:

S^2 +s/k + 4/k = 0

$$\omega_n^2 = 4/k$$

$$2\omega_n\delta = \frac{1}{k}$$

$$2 \times 0.5 \times \sqrt{\left(\frac{4}{k}\right)} = 1/k$$

$$K = ¼$$

Hence, the correct answer is an option (b).

158. The step error coefficient of a system G(s) = 1/ (s+2)(s+3) with unity feedback is:

a. 0
b. Infinite
c. 1
d. 1/6

Answer: (d) 1/6

Explanation: The step error can be calculated as:

ess = sR(s)/ (1 + G(s))

R(s) = 1/s (in case of unity feedback)

G(s) = 1/ (s+2)(s+3)

ess = (s x 1/s)/ (1 + (1/ (s+2)(s+3)))

ess = 1/(1 + kp)

Where, kp is the step error coefficient

Kp can be calculated as:

$$Kp = \lim_{s \to 0} \frac{1}{(s+2)(s+3)}$$

$$Kp = \frac{1}{2.3}$$

$$Kp = \frac{1}{6}$$

Hence, the correct answer is an option (d).

159. The transfer function of a control system is given by G(s) = 25/ (s^2 + 6s + 25). The first maximum value of the response occurs at t, which is given by:

a. π⁄2
b. π⁄8
c. π⁄4
d. π

Answer: (c) π⁄4

Explanation: The given transfer function is: G(s) = 25/ (s^2 + 6s + 25)

Comparing the value of the given transfer function with the standard equation

$$G(s) = K\,\omega_n^2/(s|2 + 2\omega_n\delta s + \omega_n^2)$$

We get:

$$\omega_n^2 = 25$$

$$\omega_n = 5$$

$$2\omega_n\delta = 6$$

$$\delta = 0.6$$

$$\omega_d = \omega_n\sqrt{(1-\delta^2)}$$

$$\omega_d = 5\sqrt{(1-0.6^2)}$$

$$\omega_d = 5\sqrt{(1-0.36)}$$

$$\omega_d = 5\sqrt{(0.64)}$$

$$\omega_d = 5 \times 0.8$$

$$\omega_d = 4$$

We know,

$$Tmax = \frac{\pi}{\omega_d}$$

$$Tmax = \frac{\pi}{4}$$

Hence, the correct answer is option (c).

160. The impulse response of an RL circuit is:

a. Parabolic function
b. Step function
c. Rising exponential function
d. Decaying exponential function

Answer: (d) Decaying exponential function

Explanation: The RL circuit comprises of the resistor and inductor connected in series.

The equation can be written as:

1 = RI(s) + sLI(s)

1 = I(s) [R + sL]

I(s) = 1 / (R +sL)

Taking the inverse Laplace, we get:

$$i(t) = \frac{1}{L} e^{\frac{-R}{L}t}$$

The equation clearly depicts that the impulse response is a decaying exponential function.

Hence, the correct answer is option (d).

161. Calculate the poles and zeroes for the given transfer function G(s) = 5 (s + 2)/ (s^2 + 3s + 2)

a. -2, (-1, -2)
b. 2, (-1, 2)
c. 2, (1, 2)
d. -2, (1, -2)

Answer: (a) -2, (-1, -2)

Explanation: The zeroes can be calculated by equating the numerator to zero:

5 (s + 2) = 0

5s + 10 = 0

5s = -10

s = -2

The poles can be calculated by equating the denominator to zero:

s^2 + 3s + 2 = 0

s^2 + 2s + s + 2 = 0

s (s + 2) + 1 (s + 2) = 0

(s + 1) (s + 2) = 0

s = -1, -2

Hence, the correct answer is an option (a).

162. The number of roots in the left half of the s-plane of the given equation s^3 + 3s^2 + 4s + 1 = 0 is:

a. One

b. Three
c. Two
d. Zero

Hide Answer Workspace

Answer: (b) Three

Explanation: The given characteristic equation is: s^3 + 3s^2 + 4s + 1 = 0.

To find the number of roots, we need to create a Routh table, as shown below:

s^3	1	4
s^2	3	1
s^1	11/3	0
s^0	1	

There are no roots and no significant changes in the RHS plane, as shown in the above table. Hence, all three roots lie in the LHS plane.

Hence, the correct answer is an option (b).

163. A system with the polynomial s^4 + 5s^3 + 3s^2 + 6s + 5 = 0 is:

a. Unstable
b. Marginally stable
c. In equilibrium
d. Stable

Answer: (a) Unstable

Explanation: The given characteristic equation is: s^4 + 5s^3 + 3s^2 + 6s + 5 = 0. We first need to find the roots by creating the Routh's array table.

Routh's array table is shown below:

s^4	1	3	5
s^3	5	6	0
s^2	9/5	5	
s^1	-71/9	0	
s^0	5		

In the first column of the above table, we have two sign changes. It means that two roots are in the RHS plane. Hence, the system is unstable.

Hence the correct answer is an option (a).

164. If s^3 + Ks^2 + 5s + 10 = 0, the root of the feedback system's characteristic equation is said to be critically stable. Then, the value of K will be:

a. 1
b. 2
c. 3
d. 4

Answer: (b) 2

Explanation: For the above equation, we need to find the roots by creating the Routh's array table. The given equation is: s^3 + Ks^2 + 5s + 10

The table is given below:

s^3	1	5
s^2	K	10
s^1	(5K -10)/K	0
s^0	10	

For the system to be critically stable, we will put (5K -10)/K = 0

5K - 10 = 0

5K = 10

K = 2

The value of K for which the system is said to be critically stable is 2.

Hence, the correct answer is an option (b).

165. If s^3 + 3s^2 + 4s + A = 0, the roots of the characteristic equation lie in the left half of the s-plane. The value of the A is said to be:

a. 0 < A < 12
b. 5< A < 12
c. A > 12
d. A < 12

Answer: (a) 0 < A < 12

Explanation: For the above equation, we need to find the roots by creating the Routh's array table. The given equation is: s^3 + 3s^2 + 4s + A = 0

The table is given below:

s^3	1	4
s^2	3	A
s^1	(12 – A)/3	0
s^0	A	

There is no change in sign in the first column of the Routh table. It means that all roots lies in the left half of the s-plane.

Putting A and (12 - A)/3 > 0, we get:

A > 0 (or 0 < A)

(12 - A)/3 > 0

12 - A > 0

12 > A (or A < 12)

From the above equations, we get two values of A, i.e., A > 0 and A < 12. It means that A lies between 0 and 12, as shown below:

0 < A < 12

Hence, the correct answer is an option (a).

166. For the given closed-loop system, the ranges of the values of K for stability is:

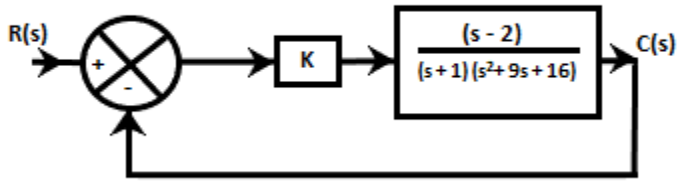

a. K > -19.5

b. k > 8

c. -19.5 < k < 8

d. K > 0

Answer: (c) -19.5 < k < 8

Explanation: The two blocks in the above diagram are in cascade. So, the equivalent block will be the product of these two blocks.

G(s) = k (s - 2) /(s +1) (s^2 + 9s + 16)

Now, H(s) = 1, as shown in the above block diagram. The characteristic equation will be: 1 + G(s) H(s)

C(s) = 1 + [k (s - 2) / (s + 1) (s^2 + 9s + 16)] = 0

= s^3 + 10s^2 + 25s + 16 + ks - 2k

= s^3 + 10s^2 + s (25 + k) + 16 - 2k

For the above equation, we need to find the roots by creating the Routh's array table.

The table is given below:

s^3	1	(25 + k)
s^2	10	16 - 2k
s^1	[10 (25 + k) – (16 -2k)] /10	0
s^0	16 - 2k	

For stability,

16 - 2k > 0

16 > 2k

$8 > k$ or $k < 8$

$10 (25 + k) - (16 - 2k) /10 > 0$

$250 + 10k - 16 + 2k > 0$

$12k + 234 > 0$

$12k > -234$

$k > -19.5$

From the two values of k, we can say that it lies between $-19.5 < k < 8$

Hence, the correct answer is an option (c).

167. Find the number of asymptotes for the given open-loop transfer function of a unity feedback system:

$G(s) = ((s + 2) (s+3) (s + 4)) / ((s + 5) (s+6) (s + 1))$

a. 1
b. 0
c. 2
d. 3

Answer: (b) 0

Explanation: The number of asymptotes in a given system is equal to the number of branches approaching infinity. So, the formula to calculate the number of asymptotes is P -Z. Here, P and Z represent the poles and zeroes.

We know that poles and zeroes are calculated by equating the denominator and numerator to zero. So, for the given open-loop transfer function, we get:

$P = 3$

$Z = 3$

So, the number of zeroes at infinity = 3 - 3 = 0

Hence, the correct answer is an option (b).

168. An open loop transfer function is given by $G(s) = K (s + 1) / (s + 4)(s^2 + 3s + 2)$. It has:

a. One zero at infinity
b. Three zeroes at infinity
c. Two zeroes at infinity
d. None of the above

Answer: (c) Two zeroes at infinity

Explanation: The formula to calculate a number of zeroes at infinity is P - Z. Here, P and Z are the number of poles and zeroes in a given transfer function.

We know that poles are calculated by equating the denominator to zero, and zeroes are calculated by equating the numerator to zero. So, for the above given transfer function, we get:

P = 3

Z = 1

So, the number of zeroes at infinity = 3 - 1 = 2

Hence, the correct answer is an option (c).

169. The characteristic equation of the feedback control system is given as: $s^3 + 4s^2 + (K + 5)s + K = 0$

Here, K is a scalable variable parameter. In the root loci diagram of the system, the asymptotes of the root locus for large values of K meet at a point in the s-plane whose coordinate is:

a. (-1.5, 0)
b. (-2, 0)
c. (-1, 0)
d. (2, 0)

Answer: (b) (-2, 0)

Explanation:

The given equation for the feedback control system is $s^3 + 5s^2 + (K + 6)s + K = 0$.

The above equation can also be written as:

$s^3 + 5s^2 + Ks + 6s + K = 0$

$s^3 + 5s^2 + 6s + K(s + 1) = 0$

$s (s^2 + 5s + 6) + K(s + 1) = 0$

$1 + K(s + 1) / [s (s^2 + 5s + 6)] = 0$

$1 + K(s + 1) / s (s^2 + 2s + 3s + 6) = 0$

$1 + K(s + 1) / s (s + 2)(s + 3) = 0$

Now, we will calculate the value of centroid, which is equal to:

$\sigma = / (P - Z)$

Here, the number of poles and zeroes are 3 and 1.

$\sigma = [(0 - 2 - 3) + 1] / (3 - 1)$

$\sigma = (-4)/2$

$\sigma = -2$

Hence, the correct answer is option (b).

170. Stability of a system implies that :
a) Small changes in the system input does not result in large change in system output
b) Small changes in the system parameters does not result in large change in system output
c) Small changes in the initial conditions does not result in large change in system output
d) All of the above mentioned

Answer: d
Explanation: Stability of the system implies that small changes in the system input, initial conditions, and system parameters does not result in large change in system output.

171. A linear time invariant system is stable if :
a) System in excited by the bounded input, the output is also bounded
b) In the absence of input output tends zero
c) Both a and b
d) System in excited by the bounded input, the output is not bounded

Answer: c
Explanation: A system is stable only if it is BIBO stable and asymptotic stable.

172. Asymptotic stability is concerned with:
a) A system under influence of input
b) A system not under influence of input
c) A system under influence of output
d) A system not under influence of output

Answer: b
Explanation: Asymptotic stability concerns a free system relative to its transient behavior.

173. Bounded input and Bounded output stability notion concerns with :
a) A system under influence of input
b) A system not under influence of input
c) A system under influence of output
d) A system not under influence of output

Answer: a
Explanation: BIBO stability concerns with the system that has input present.

174. If a system is given unbounded input then the system is:
a) Stable
b) Unstable
c) Not defined
d) Linear

Answer: c
Explanation: If the system is given with the unbounded input then nothing can be clarified for the stability of the system.

175. Linear mathematical model applies to :
a) Linear systems
b) Stable systems
c) Unstable systems
d) Non-linear systems
Answer: b
Explanation: As the output exceeds certain magnitude then the linear mathematical model no longer applies.
176. For non-linear systems stability cannot be determined due to:
a) Possible existence of multiple equilibrium states
b) No correspondence between bounded input and bounded output stability and asymptotic stability
c) Output may be bounded for the particular bounded input but may not be bounded for the bounded inputs
d) All of the mentioned

Answer: d
Explanation: For non-linear systems stability cannot be determined as asymptotic stability and BIBO stability concepts cannot be applied, existence of multiple states and unbounded output for many bounded inputs.

177. If the impulse response in absolutely integrable then the system is :
a) Absolutely stable
b) Unstable
c) Linear
d) Stable

Answer: a
Explanation: The impulse response must be absolutely integrable for the system to absolutely stable.

178. The roots of the transfer function do not have any effect on the stability of the system.
a) True
b) False

Answer: b
Explanation: The roots of transfer function also determine the stability of system as they may be real, complex and may have multiplicity of various order.

179. Roots with higher multiplicity on the imaginary axis makes the system :
a) Absolutely stable
b) Unstable
c) Linear
d) Stable
Answer: b
Explanation: Repetitive roots on the imaginary axis makes the system unstable.
180. Roots on the imaginary axis makes the system :
a) Stable
b) Unstable
c) Marginally stable
d) Linear

Answer: c
Explanation: Roots on the imaginary axis makes the system marginally stable.

181. If the roots of the have negative real parts then the response is _____
a) Stable
b) Unstable
c) Marginally stable
d) Bounded

Answer: d
Explanation: If the roots of the have negative real parts then the response is bounded and eventually decreases to zero.

182. If root of the characteristic equation has positive real part the system is :
a) Stable
b) Unstable
c) Marginally stable
d) Linear

Answer: b
Explanation: The impulse response of the system is infinite when the roots of the characteristic equation has positive real part.

183. A linear system can be classified as :
a) Absolutely stable
b) Conditionally stable
c) Unstable
d) All of the mentioned

Answer: d
Explanation: A system can be stable, unstable and conditionally stable also.

184. _____ is a quantitative measure of how fast the transients die out in the system.
a) Absolutely stable
b) Conditionally stable
c) Unstable
d) Relative Stability
Answer: d
Explanation: Relative Stability may be measured by relative settling times of each root or pair of roots.

185. The techniques of linear system can be used in the non-linear system entirely:
a) True
b) False
Answer: a
Explanation: The techniques of the linear system cannot be entirely used in the non-linear system as they are differentiated by this way only.

186. The disadvantages of the linear system are:
a) The constraints on the linear operation over wide range demands unnecessarily high quality.
b) The restriction to the linear theory may inhibit the designer's curiosity to deliberately introduce the non-linear components.
c) Practically systems are non-linear
d) All of the mentioned
Answer: d
Explanation: Linear system impose certain restrictions as the components cost is very high and it will cause restriction to operate the otherwise linear components in non-linear region with a view to improve system response.

187. System non-linearities are taken account by:
a) Analytical
b) Graphical and numerical techniques
c) Both a and b
d) None of the mentioned

Answer: c
Explanation: Systems non-linearities are taken into account by the analytical, graphical and numerical techniques.

188. The superposition theorem is :
a) Homogeneity
b) Additivity
c) Combination of homogeneity and additivity
d) Applied to non-linear systems

Answer: c
Explanation: Superposition theorem applies to linear system only and it refers to the additivity and homogeneity.

189. The standard test signal can be applied to give output to:
a) Linear systems
b) Non-linear systems
c) Time variant systems
d) Time invariant systems

Answer: a
Explanation: For linear systems the standard test signals can be applied to give the desired output.

190. The amplitude of the standard test signal does not matter in linear systems:
a) True
b) False
Answer: a
Explanation: The amplitude of the standard test signal is unimportant since any change in input signal amplitude results simply change in response scale with no change in the basic response characteristics.

191. The non-linear systems:
a) Do not obey superposition theorem
b) May be highly sensitive to the input amplitude
c) Laplace and z transform are not applicable to the non-linear systems
d) All of the mentioned

Answer: d
Explanation: The non-linear systems do not obey superposition theorem and also may be highly sensitive to the input impedance and Laplace and z transform are only applicable to the linear systems.

192. The stability of the linear system:
a) Determined by the location of the poles
b) Dependent entirely of whether or the system is driven
c) The stability of the undriven linear system is dependent on the magnitude of the final initial state.
d) Stability cannot be determined by the open loop poles

Answer: a
Explanation: Linear system's stability can be determined by the location of poles and also it is independent entirely of whether or the system is driven and the stability of the undriven linear system is independent on the magnitude of the final initial state.

193. In non-linear system stability is :
a) Dependent on the input
b) Independent on initial state
c) Independent on input

d) Dependent on input and initial state.

Answer: d
Explanation: In non-linear system the stability is dependent on the input and initial states.

194. Non-linear elements may exhibit_____
a) Linear systems
b) Non-linear systems
c) Limit cycles
d) Time invariant systems

Answer: c
Explanation: Non-linear elements may exhibit the limit cycles which are self-sustained oscillations of fixed frequency and amplitude. Determination of existence of limit cycles is not an easy task as these may depend upon both the type and amplitude of the excitation signal.

195. The necessary condition of stability are:
a) Coefficient of characteristic equation must be real and have the same sign
b) Coefficient of characteristic equation must be non-zero
c) Both of the mentioned
d) Coefficient of characteristic equation must be zero
Answer: c
Explanation: The necessary condition of stability are coefficient of characteristic equation must be real, non-zero and have the same sign.
196. None of the coefficients can be zero or negative unless one of the following occurs:
a) One or more roots have positive real parts
b) A root at origin
c) Presence of root at the imaginary axis
d) All of the mentioned

Answer: d
Explanation: None of the coefficients can be zero or negative unless one or more roots have positive real parts, root at origin and presence of root at the imaginary axis.

197. The _____ of the coefficients of characteristic equation is necessary as well as sufficient condition for the stability of system of first and second order.
a) Negativeness
b) Positiveness
c) Positiveness and Negativeness
d) None of the mentioned

Answer: b
Explanation: The Positiveness of the coefficients of characteristic equation is necessary as well as sufficient condition for the stability of system of first and second order.

198. The Positiveness of the coefficients of characteristic equation is necessary as well as sufficient condition for:
a) First order system
b) Second order system
c) Third order system
d) None of the mentioned

Answer: c
Explanation: It does not ensure the negativeness of the real parts of the complex roots of the third or higher order systems.

199. Assertion (A): Routh criterion is in terms of array formulation, which is more convenient to handle.
Reason (R): This method is used to investigate the method of stability of higher order systems.
a) Both A and R are true and R is correct explanation of A
b) Both A and R are true and R is not correct explanation of A
c) A is true but R is false
d) A is False but R is true
Answer: b
Explanation: Routh criterion is in terms of array formulation which is convenient to handle stability problems of higher order systems.

200. Routh Hurwitz criterion gives:
a) Number of roots in the right half of the s-plane
b) Value of the roots
c) Number of roots in the left half of the s-plane
d) Number of roots in the top half of the s-plane

Answer: a
Explanation: Routh Hurwitz criterion gives number of roots in the right half of the s-plane.

201. Routh Hurwitz criterion cannot be applied when the characteristic equation of the system containing coefficient's which is/are
a) Exponential function of s
b) Sinusoidal function of s
c) Complex
d) Exponential and sinusoidal function of s and complex

Answer: d
Explanation: Routh Hurwitz criterion cannot be applied when the characteristic equation of the system containing coefficient/s which is/are exponential, sinusoidal and complex function of s.

202. Consider the following statement regarding Routh Hurwitz criterion:
a) It gives absolute stability
b) It gives gain and phase margin
c) It gives the number of roots lying in RHS of the s-plane
d) It gives gain, phase margin and number of roots lying in RHS of the s-plane

Answer: d
Explanation: Routh Hurwitz gives the absolute stability and roots on the right of the s plane.

203. The order of the auxiliary polynomial is always:
a) Even
b) Odd
c) May be even or odd
d) None of the mentioned

Answer: a
Explanation: Auxiliary polynomial denotes the derivative of the odd equation which is always even.

204. Which of the test signals are best utilized by the stability analysis.
a) Impulse
b) Step
c) Ramp
d) Parabolic

Answer: a
Explanation: Computational task is reduced to much extent.

205. The characteristic equation of a system is given as3s4+10s3+5s2+2=0. This system is :
a) Stable
b) Marginally stable
c) Unstable
d) Linear

Answer: c
Explanation: There is a missing coefficient so the system is unstable.

206. The characteristic equation of a system is given ass3+25s2+10s+50=0. What is the number of the roots in the right half s-plane and the imaginary axis respectively?
a) 1,1
b) 0,0
c) 2,1
d) 1,2

Answer: b
Explanation: The characteristic equation has no sign changes so number of roots on the right half of s plane is zero.

207. Consider the following statement:
a) A system is said to be stable if its output is bounded for any input
b) A system is said to be stable if all the roots of the characteristic equation lie on the left half of the s plane.
c) A system is said to be stable if all the roots of the characteristic equation have negative real parts.
d) A second order system is always stable for finite values of open loop gain

Answer: a
Explanation: A system is stable if its output is bounded for bounded input.

208. The necessary condition for the stability of the linear system is that all the coefficients of characteristic equation 1+G(s)H(s) =0, be real and have the :
a) Positive sign
b) Negative sign
c) Same sign
d) Both positive and negative

Answer: c
Explanation: The necessary condition for the stability of the linear system is that all the coefficients of characteristic equation 1+G(s)H(s) =0, is they must have same sign.

209. For making an unstable system stable:
a) Gain of the system should be increased
b) Gain of the system should be decreased
c) The number of zeroes to the loop transfer function should be increased
d) The number of poles to the loop transfer function should be increased

Answer: b
Explanation: For making an unstable system stable gain of the system should be decreased.

210. A system with unity feedback having open loop transfer function as G(s) = K(s+1)/s3+as2+2s+1. What values of 'K' and 'a' should be chosen so that the system oscillates ?
a) K =2, a =1
b) K =2, a =0.75
c) K =4, a =1
d) K =4, a =0.75

Answer: b
Explanation: Solving Routh Hurwitz table whenever row of zero occurs, the roots are located symmetrically on the imaginary axis then the system response oscillates, a =1+K/2+K. If K =2 is consider then a =0.75.

211. The open loop transfer functions with unity feedback are given below for different systems. Among these systems the unstable system is
a) G(s) =2/s+2
b) G(s) =2/s(s+2)
c) G(s) =2/(s+2)s^2
d) G(s) =2(s+1)/s(s+2)

Answer: c
Explanation: 1+2/s^2(s+2) =0. The coefficient of's' is missing. Hence the system is unstable.

212. Determine the stability of closed loop control system whose characteristic equation is $s^5+s^4+2s^3+2s^2+11s+10=0$.
a) Stable
b) Marginally stable
c) Unstable
d) None of the mentioned

Answer: b
Explanation: By Routh array s =0 and s =+j. It is having a pair of conjugate root lying on imaginary axis. System is marginally stable.

213. Determine the condition for the stability of unity feedback control system whose open loop transfer function is given by
$G(s) = 2e^{-st}/s(s+2)$
a) T >1
b) T <0
c) T <1

d) T >0

Answer: c
Explanation: G(s) =2(1-sT)/s(s+2)
By Routh array analysis, for stable system, all the elements of first column need to be positive T<1.

214. Determine the value of K such that roots of characteristic equation given below lies to the left of the line s = -1. $s^3+10s^2+18s+K$.
a) K>16 and K<9
b) K<16
c) 9<K<16
d) K<9
Answer: c
Explanation: In Routh array analysis the first column must be positive and after solving K<16 and K>9.

215. Consider a negative feedback system where G(s) =1/(s+1) and H(s) =K/s(s+2). The closed loop system is stable for
a) K>6
b) 0<K<2
c) 8<K<14
d) 0<K<6
Answer: d
Explanation: Using Routh array, for stability k<6.

216. The characteristic equation of a feedback control system is $s^3+Ks^2+9s+18$. When the system is marginally stable, the frequency of the sustained oscillation:
a) 1
b) 1.414
c) 1.732
d) 3
Answer: d
Explanation: Solve using Routh array and for the system to be marginally stable, K = -2. Polynomial for sustained oscillation w = 3 rad/s.
217. Consider a characteristic equation, $s^4+3s^3+5s^2+6s+k+10=0$. The condition for stability is
a) K>5
b) -10<K
c) K>-4
d) -10<K<-4
Answer: d
Explanation: Solve Roth array for the system stable, -10<K<4.
218. The polynomial $s^4+Ks^3+s^2+s+1=0$ the range of K for stability is _____
a) K>5
b) -10<K

c) K>-4
d) K-1>0
Answer: d
Explanation: Solving using Routh array we get K-1>0 and is always negative for K>1.

219. The characteristic equation of a system is given by$3s^4+10s^3+5s^2+2=0$. This system is:
a) Stable
b) Marginally stable
c) Unstable
d) Linear
Answer: c
Explanation: There is missing coefficient so system is unstable.

Prepared By Mr. Tupe S.G	**Verified By** Ms. Jarad U.T Module Coordinator	**Re-Verified By** Ms. Navale S.N Academic Coordinator	**Approved By** Mr. Tupe S.G HoD EJ

03 – Process controller.	**Marks:-16**
Content of Unit:- 3.1 Block diagram & functions of process control systems 3.2 control action 3.1.1 Discontinuous mode of on - off controllers systems. 3.1.2 On -off controller equation & neutral zone concept. Proportional controller in continuous mode 3.3 composite controllers 3.3.1 Integral & derivative controller with equations &Bit's response 3.3.2 PI composite controllers with equations PD ,PID controllers with output equations	

1 The transfer function of PID controller is:
a) KP + KI/s + KDs
b) s.KP + KI/s + KDs
c) KP + s.KI + KD/s
d) s.KP + KI/s + KD/s
Correct answer: 1. KP + KI/s + KDs
Explanation:
The transfer function of a proportional controller is KP

While transfer function of the integral controller is KI/s
While transfer function of derivative controller is KDs

Since a PID controller (Proportional, Integral, Derivative controller) is a combination of all the three, the ***transfer function of PID controller is KP + KI/s + KDs***

2 Which controller cannnot be used for constant error:

a) P controller

b) I controller

c) D controller

d) PI controller

Correct answer: option c

Explanation: The derivative controller produces a control action based on the rate of change of error signal and it does not produce corrective measures for any constant error.

3 Which control action produces a constant steady state error.

a) P controller

b) I controller

c) D controller

d) PI controller

Correct answer: option a

Explanation: The disadvantage in proportional controller is that it produces a constant steady state error.

4 Following is the is the effect of PD controller on system performance

a) Increses gain

b) increases damping ratio

c) Decreases gain

d) Decreases daming ratio

Correct answer: b

Explanation:

The effect of PD controller is to increase the damping ratio of the system and so the peak
overshoot is reduced.

5 A proportional plus derivative controller:

a) 1. has high sensitivity.

b) 2. increases the stability of the system.

c) 3. improves steady-state accuracy.

Which of the above statements are correct?

1, 2, and 3

1 and 2 only

1 and 3 only

Answer: Option b

Explanation:

Proportional + Derivate:

The additive combination of proportional & Derivative control is known as P-D control. The overall transfer function for a PD controller is given by:

The frequency of noise is very high. So this high pass filter will allow noise into the system which results in noise amplification. Effects of Proportional Derivative (PD) controllers: Decreases the type of the system by one Reduces the rise time and settling time It has high sensitivity. Rise time and settling time decreases and Bandwidth increases The speed of response is increased i.e. the transient response is improved Improves gain margin, phase margin, and resonant peak Increases the input noise Improves the stability

6 Slow response of an over-damped system can be made faster with the help of _____ controller.

a) PD

b) P

c) PI

d) Remote

Answer: Option b

Explanation: The controller is a device that is used to alter or maintain the transient state & steady-state region performance parameter as per our requirement.

The standard Proportional Controller as shown: In space-form - In time-domain form - p(t) = K e(t) + p Where, p = controller output with zero error K = proportional gain constant. Some effects of the proportional controller are as follows: The P-controller can stabilize a first-order system, can give a near-zero error, and improves the settling time by increasing the bandwidth. It also helps in reducing the steady-state error which makes the system more stable. The slow response of an over-damped system can be made faster with the help of the proportional controller. Hence option (2) is the correct answer.

7 A condition where integral control drives the output of a controller into saturation is called _____

a) Wind - Up

b) Noise

c) Repeat

d) Offset

Answer: Option a

Explanation: Integral Control: Integral control is based on the principle that the controller's output should be proportional to both the magnitude and duration of the error. The controller's output will continue to change its value until the error is zero.

So we can say that the most important feature of the integral controller is to make the integral response rise continuously over time unless the error is zero, so the effect is to drive the SteadyState error to zero. Steady-State error is the final difference between the process variable and setpoint. A phenomenon called integral windup results when integral action saturates a controller without the controller driving the error signal toward zero. Hence option (1) is the correct answer.

8 The electric switch to control any electrical equipment will act as a:

a) PD controller

b) Proportional controller

c) PID controller

d) ON/OFF controller

Answer: Option d

Explanation: ON/OFF controller: The electric switch to control any electrical equipment will act as an ON/OFF controller. The on-off control is the simplest form of a controller, which switches ON when the error is positive and switches OFF when the error is zero or negative. An on-off controller doesn't have intermediate states but only fully ON or fully OFF states.

Regardless of the size of the error, the output of the on-off controller can only be fully ON or fully OFF, it is not proportional with the error. The main advantages of on-off controllers are: simplicity, inexpensive and digital output (only two states). The main disadvantages are: the controlled parameter will continuously switch around the set-point and if the hysteresis is not correctly set, the deviation from the set-point could be quite significant. On-off control is primarily used in non critical applications, where the error between the setpoint and plant output can vary with a relatively large amount. For example, temperature control systems for houses (heating and cooling), freezers and other home appliances are using on-off control.

9 A Control system with PD controller is shown. If velocity error constant is K = 1000 and the damping ratio is 0.5 then the values of K and K Should be:

a) Kp = 100, KD = 0.09
b) KP = 100, KD = 0.9
c) KP = 10, KD = 0.09
d) KP = 10, KD = 0.9

Answer: Option b

Explanation:

Detailed Solution

Concept:

Velocity error coefficient is given

$1 + (G(s)\,H(s)) = 0$

$$1 + \frac{(100+K_D s)100}{s(s+10)} = 0$$

$\Rightarrow s^2 + (10+100k_D)s+10^4 = 0$

Comparing with standard second order equation:

$2\xi w_n = 100\,k_D + 10$

$$2\left(\frac{1}{2}\right)(100) = K_D + 10$$

$90 = 100\,k_D$

$K_D = 0.9$

10 In a closed-loop process control system with a PID controller, _____ response depends only on the difference between set point and the process variable.

a) proportional
b) integral
c) differential
d) All of these

Answer: Option d

Explanation:

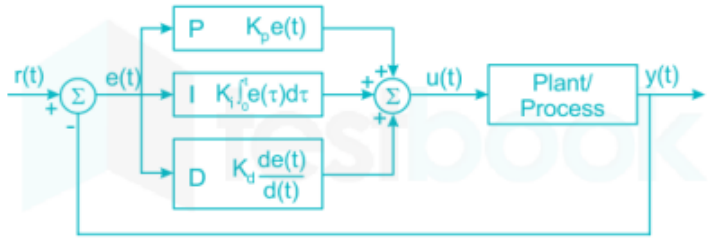

$$\frac{C(s)}{R(s)} = \frac{\left(sT_d + K + \frac{K_I}{s}\right)G(s)}{1 + \left(sT_d + K + \frac{K_I}{s}\right)G(s)}$$

It represents the PID controller.

Close loop transfer function depends on all type of controller.

$e(s) \propto sT_d$ (Derivative controller)

$e(s) \propto K$ (Proportional controller)

$e(s) \propto K_I/s$ (Integral controller)

Condition for PID controller:

where $K(s) = sT_d + K + K_I/s$

PID controller is an instrument used in control applications to regulate flow, speed, pressure, temperature and other variable process

The standard **Proportional Controller** as shown:

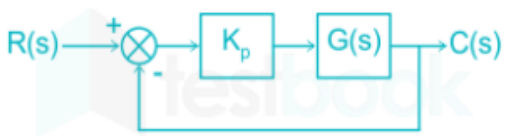

11

In space-form -

a) $G_C(s) = \frac{U(s)}{E(s)} = \frac{K_p}{s(s+1)}$

b)

c) In time-domain form -

d) $p(t) = K_p e(t) + p_o$

Where,

p_o = controller output with zero error

K_p = proportional gain constant.

Some effects of the proportional controller are as follows:

- The P-controller can stabilize a first-order system, can give a near-zero error, and improves the settling time by increasing the bandwidth.
- It can also destabilize the system by using very high gains because it reduces the gain margin.
- Even though the system can be stable by the use of a small gain proportional controller, the performance of the system are generally not so good.

Analysis:

Rise time (t_r): It is defined as the time required for a pulse or signal to increase from one specified value (as 10 %) of its amplitude to another (as 90%).

3-dB Bandwidth: The frequency at which the power level of the signal decreases by ***3 dB*** from its maximum value is called the ***3 dB bandwidth***, The ***3 dB bandwidth*** is the frequency at which the signal amplitude reduces by ***3 dB*** i.e. becomes half its value.

The relationship between the rise time(t_r) and bandwidth is given by:

$$B.W. = \frac{0.35}{t}$$

Proportional + Derivate:

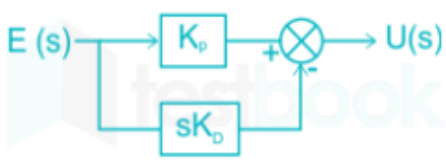

12 a) b) c) d)

The additive combination of proportional & Derivative control is known as P-D control.

The overall transfer function for a PD controller is given by:

$$G_C(s) = \frac{U(s)}{E(s)} = K_P + sK_D$$

PD controller is nothing but a differentiator (or) a High Pass Filter.

The frequency of noise is very high. So this high pass filter will allow noise into the system which results in noise amplification.

Hence option 2 is correct.

13 The effect of integral controller on the steady state error (e) and on the relative stability (R) of the system are

a) Both are increased

b) ess is increased but Rs is reduced

c) ess is reduced but Rs is increased

d) Both are reduced

Answer: Option d

Explanation:

Integral control is based on the principle that the controller's output should be proportional to both the magnitude and duration of the error. The controller's output will continue to change its value until the error is zero. This property enables integral action to eliminate offset error automatically (∴ It is sometimes called as automatic reset controller) Also, a smaller amplitude causes a slower rate of change of the output.

The general block diagram of an Integral controller is shown below:

Features:

- This controller is a memory-based controller.
- This increases the type of system.
- **This controller reduces steady-state error.**
- **This controller improves the steady-state response.**

14 A proportional integral (PI) controller results in which of the following ?

a) Improves the transient response without affecting steady state response

b) Improves the steady state response without affecting transient response

c) Improves both transient response and steady state response

d) Improves the steady state response while marginally affecting transient response, for well designed control parameters

Answer: Option d

Explanation:

PI Controller improves the steady state error due to integral action but proportional action improves the transient response marginally by speeding up the transients. Effects of Proportional Integral (PI) controllers: Increases the type of the system by one Rise time and settling time increases and Bandwidth decreases

Effects of Proportional Derivative (PD) controllers:

- Decreases the type of the system by one
- Reduces the rise time and settling time
- Rise time and settling time decreases and Bandwidth increases
- The speed of response is increased i.e. transient response is improved
- Improves gain margin, phase margin, and resonant peak
- Increases the input noise
- Improves the stability

15 Which of these statements is correct about proportional plus derivative controller?

a) It decreases the stability of the system

b) It has high sensitivity

c) It improves the steady-state accuracy

d) The derivative constant is expressed in units of hours

Answer: Option b

Explanation:

Proportional + Derivate:

The additive combination of proportional & Derivative control is known as P-D control.

The overall transfer function for a PD controller is given by:

$$G_C(s) = \frac{U(s)}{E(s)} = K_P + sK_D$$

PD controller is nothing but a differentiator (or) a High Pass Filter.

The frequency of noise is very high.

So this high pass filter will allow noise into the system which results in noise amplification.

Effects of Proportional Derivative (PD) controllers:

- Decreases the type of the system by one
- Reduces the rise time and settling time
- It has high sensitivity.
- Rise time and settling time decreases and Bandwidth increases
- The speed of response is increased i.e. the transient response is improved
- Improves gain margin, phase margin, and resonant peak
- Increases the input noise
- Improves the stability

16 Which of the following is a correct statement

a) PI controllers improves steady state response

b) PD controllers improves transient response

c) Both (a) & (b)

d) None of these

Answer: Option c

Explanation:

Proportional + Derivate(PD):

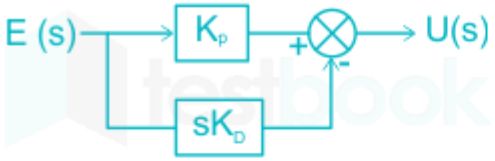

The additive combination of proportional & Derivative control is known as P-D control.

The overall transfer function for a PD controller is given by:

$$G_C(s) = \frac{U(s)}{E(s)} = K_P + sK_D$$

PD controller is nothing but a differentiator (or) a High Pass Filter.

The frequency of noise is very high.

So this high pass filter will allow noise into the system which results in noise amplification.

PD Controllers reduce the response time and thus improve transient response

17 A feedforward proportional-derivative (PD) compensator in a closed loop system

a) reduces steady state accuracy

b) improves steady state accuracy

c) reduces stability

d) improves stability

Answer: Option d

Explanation:

18

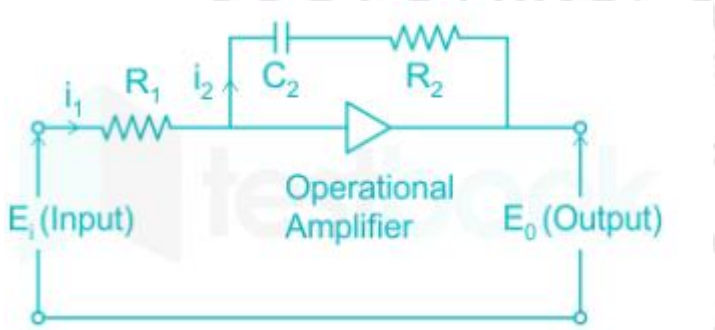

The circuit diagram of a controller is given in figure. What type of controller is this?

a) Proportional

b) P+D

c) Integral

d) Proportional + Integral

Answer: Option d

Explanation:

Concept:

→ To identify the type of controller, find the transfer function i.e. ratio of output & input.

1) If $\frac{V_o(s)}{V_i(s)} = H(s) = K_p \rightarrow$ Proportional controller.

2) If $\frac{V_o(s)}{V_i(s)} = H(s) = K_p + s.K_D \rightarrow$ P-D controller.

3) If $\frac{V_o(s)}{V_i(s)} = H(s) = K_p + s.K_D + \frac{K_I}{s} \rightarrow$ P-I-D controller

4) If $\frac{V_o(s)}{V_i(s)} = H(s) = K_p + \frac{K_I}{s} \rightarrow$ P-I controller

Analysis:

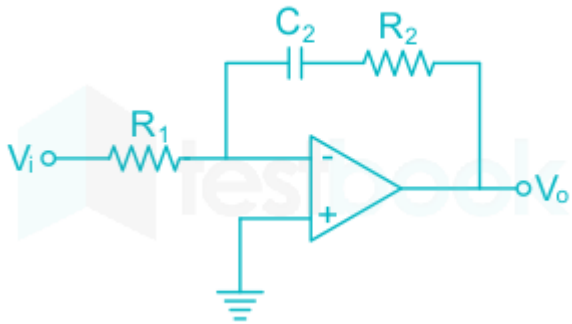

→ transfer into S-domain.

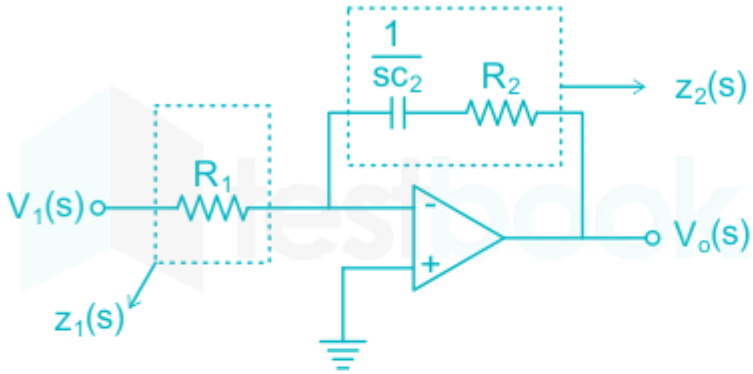

$\therefore \frac{V_o(s)}{V_i(s)} = \frac{Z_2(s)}{Z_1(s)}$ {Neglecting '-ve' sign because it has no-significance for identifying controller}

$= \frac{R_2 + \frac{1}{sC_2}}{R_1}$

$$H(s) = \frac{R_2}{R_1} + \frac{\frac{1}{R_1 C_2}}{s} = K_p + \frac{K_I}{s}$$

∴ Given controller is of P-I type.

19. The input of a controller is

a) Sensed signal

b) Error signal

c) Desired variable value

d) Signal of fixed amplitude not dependent on desired variable value

Answer: b

Explanation: Controller is the block in the control system that control the input and provides the output and this is the first block of the system having the input as the error signal.

20. PD controller is used to compensate system. Compared to the uncompensated system, the compensated system has:

a) A higher type number
b) Reduced damping
c) Higher noise amplification
d) Large transient overshoot

Answer: c
Explanation: Proportional Derivative controller is used to increase the bandwidth and also increases the signal to noise ratio by reducing the noise and increasing the signal.

21. P+D controller:
a) Introduces offset
b) Increases bandwidth
c) Increases margin of stability
d) Reduces velocity constant

Answer: c
Explanation: Proportional Derivative controller is the controller increases margin of stability and also used to increase he bandwidth and also increases the signal to noise ratio.

22. Proportional controller:
a) Introduces offset
b) Increases bandwidth
c) Increases margin of stability
d) Reduces velocity constant

Answer: a
Explanation: Proportional controller is the controller that is block used to control the gain of the control system and introduces offset error and there is no effect on the damping factor.

23. The transfer function of a lead controller is 1+20s/1+5s. The high frequency magnitude of the lead controller to dB is _____
a) 1
b) 2
c) 3
d) 4

Answer: d
Explanation: G(s) = Tp (1+Tds)/s^2
It is type-2 function.
The type-2 function has a finite steady state error for unit-parabolic input.

24. Controllers play the following role in control system:
a) They amplify the signals going to the actuator
b) They act on the error signal coming out of the summing junction and output a suitable to the actuator

c) They try to reduce steady state error optimizes overshoot.
d) All of the mentioned

Answer: a
Explanation: Controller amplify the signals going to the actuator and they are of many types as proportional, integral, derivative some combinational controller as combination of two controllers and combination of all the controllers.

25. Consider the following statements:
1. Integral controller improves steady state response
2. By use of proportional controller, maximum peak overshoot decreases
3. Type and order of system reduces by one for derivative controller
4. Integral controller makes the system less stable in transient state due to oscillations
Select the correct answer using the codes given below:
a) 1,3 and 4
b) 1,2 and 3
c) 2.3 and 4
d) 1,2 and 4

Answer: a
Explanation: Integral controller improves steady state response and derivative controller improves the transient response, type and order of system reduces by one for derivative controller.

26. Rate mode controller is also known as _____ controller mode.
a) Anticpatory
b) Delay
c) Integral
d) Derivative

Answer: a
Explanation: Anticipatory controller mode is also known as the rate mode controller that is used to anticipate the future value with the use of the state.

27. The controller required to handle fast process load changes is:

a. PD controller
b. PI Controller
c. PID Controller
d. None of the above

Answer: (a) PD controller

Explanation: The Proportional Derivative controller is preferred to handle fast process load changes.

Hence, the correct answer is an option (a).

28. **What is the relationship between the steady-state error, gain and the tendency of oscillations when the controller is supposed to be under the proportional action?**

a. Steady-state error increases with an increase in gain and oscillation tendency

b. Steady-state error decreases with the decrease in gain and oscillation tendency

c. Steady-state error decreases with an increase in gain and oscillation tendency

d. Steady-state error increases with the decrease in gain and oscillation tendency

ANSWER: c. Steady-state error decreases with an increase in gain and oscillation tendency

Prepared By Mr. Tupe S.G	**Verified By** Ms. Jarad U.T Module Coordinator	**Re-Verified By** Ms. Navale S.N Academic Coordinator	**Approved By** Mr. Tupe S.G HoD EJ

04 – Fundamentals of PLC.	Marks:-16
Content of Unit :- 4.1 PLC block diagram, classification, benefits & it's need. 4.2 Description of PLC 4.2.1 Scanning cycle, speed of execution 4.2.2 Power supply of PLC & its function of each block. 4.2.3 Different memories, their functions & organizations. 4.2.4 PLC input & output modules with their functions 4.3 PLC installation 4.3.1 PLC installation & review of PLC fundamentals	

1 **The programmable logic controllers are used in _____**

a) Manufacturing
b) Automation
c) Both a and b
d) None of the above

Answer: option c

Explanation:
The PLC is extensively used in manufacturing and automation. Its purpose is to monitor crucial process parameters and to adjust process operation accordingly

2 **What are the components that make the programmable logic controller work?**

a) Input and output module
b) CPUPower supplyAll of the above
c) Power supply
d) All of the above

Answer: option d

Explanation:
The input module, output module, CPU, and power supply are the components that make the programmable logic controller work

3 **In fixed programmable logic controller _____**

a) Input is fixed
b) Output is fixed
c) Both a and b
d) None of the above

Answer: option c

Explanation:
In fixed programmable logic controller both input and output modules are fixed whereas in modular PLC the input and output modules are not fixed

4 **The PLC's can be programmed in _____**

a) Ladder logic,
b) structured textInstruction list,
c) Functional block diagramSequential function chartA

d) All of the above

Answer: option d

Explanation:

The programmable logic controllers can be programmed in ladder logic, structured text, instruction list, functional block diagram, and sequential function chart

5 **In modular programmable logic controller _____**

a) Input is fixed

b) Output is fixed

c) Both a and b

d) None of the above

Answer: option c

Explanation:

In modular PLC the input and output modules are expandable whereas in fixed programmable logic controller both input and output modules are fixed

6 **What are the types of programmable logic controllers?**

a) Fixed,

b) uniform PLCModular,

c) Fixed and Modular PLC

d) None of the above

Answer: option b

Explanation:

The PLC's are classified into two types they are: fixed programmable logic controller and modular programmable logic controller

7 **The components that make PLC works can be divided into _____ core areas**

a) One

b) Two

c) Three

d) Four

Answer: option c

Explanation:

The components that make PLC works can be divided into three core areas they are input/output, CPU, rack, and power supply

8 **How many operation steps does the programmable logic controller have?**

a) One

b) Two

c) Three

d) Four

Answer: option c

Explanation:

The programmable logic controller operation is of three steps they are input scan, output scan, and program scan

9 **In PLC operation _____ checks the status at the input side**

a) Input scan
b) Output scan
c) Program scan
d) None of the above

Answer: option a

Explanation:

The input scan checks the status at the input side in the programmable logic controller operation

10 **In PLC operation _____ retrieves the data into an output module**

a) Input scan
b) Output scan
c) Program scan
d) None of the above

Answer: option b

Explanation:

In PLC operation output scan retrieves the data into an output module, so that all the outputs are updated

11 **Before PLC's was created many industries used _____**

a) Capacitors
b) Relays
c) Resistors
d) None of the above

The hundreds and thousands of relays are used in industries when programmable logic controllers are not developed

12 **CCTV cameras is an example for _____ automation**

a) Building automation
b) Office automation
c) Scientific automation
d) Industrial automation

Answer: option b

Explanation:

The CCTV cameras come under office automation

13 **The control logic in a programmable logic controller can be programmed by**

a) FBD
b) ladder logic
c) Sequential logicStructured text
d) All of the above

Answer: option d

Explanation:
The control logic in a programmable logic controller can be programmed using different programming languages some of them are FBD, ladder logic, sequential logic, & structured text

14 **The programmable logic controllers are classified into _____ according to physical size in modular type PLC**

a) Mini PLC,
b) Micro PLCMicro PLC
c) None of the above
d) Nano PLC, Mini PLC, Macro PLC

Answer: option d
Explanation:
The programmable logic controllers are classified into three types according to physical size in modular type PLC they are mini, micro, and nano PLC

15 **The advantages of PLC are _____**

a) Easy maintenance
b) Reliability is high
c) Small in size
d) All of the above

Answer: option d
Explanation:
The programmable logic controllers are small in size, reliability is very high, and the maintenance of these controllers are very easy

16 **The CPU has _____**

a) Memory system
b) Processor
c) Power supply
d) All of the above

Answer: option d
Explanation:
The CPU is a control portion of the programmable logic controller that consists of a memory system, processor, and power supply

17 **_____ are the components that are required to change or create a program**

a) PLC
b) programming device
c) Programming software
d) All of the above

Answer: option d
Explanation:
The components that are required to change or create a program are PLC, programming device and software, and connector cable

18 **The sequences are classified into _____**

a) One
b) Two
c) Three
d) Four

Answer: option c

Explanation:

The sequences are classified into three types they are single sequence, complicated single sequence, and multiple sequences

19 **The PLC internally operates, stores, and calculates the value in _____**

a) Binary format
b) Decimal format
c) Octal format
d) None of the above

Answer: option a

Explanation:

The PLC stores operate and calculate the value in a binary number format

20 **Which one is the correct sequence for PLC operation?**

a) Self-test, input scan, logic scan, output scan
b) Self-test, logic scan, output scan, input scan
c) elf-test, input scan, output scan, logic scan
d) None of the above

Answer: option a

Explanation:

The correct sequence for PLC operation is self-test, input scan, logic scan, output sca

21 **The electromagnetic relays are constructed with _____**

a) Electrical components
b) Mechanical components
c) Electromechanical components
d) None of the above

Answer: option c

Explanation:

The electromagnetic relays are constructed with electromechanical components, and an operating coil and mechanical contacts

22 **The DC and AC relays works on _____ principle**

a) Motors
b) Electromagnetic induction

c) Electromechanical components
d) None of the above
Answer: option b
Explanation:
The DC and AC relays both works on the electromagnetic induction principle but the construction is somewhat differentiate

23 **The ladder logic in PLC consists of _____**
a) Logic gates
b) Functional blocks
c) Relay contacts
d) Relays
Answer: option d
Explanation:
The ladder logic in PLC consists of relays

24 **_____ is an example for office automation?**
a) Rocket launching
b) Street solar lightening
c) Printers
d) CCTV cameras
Answer: option d
Explanation:
The printers and CCTV cameras are an example for office automation

25 **The relays operates on _____**
a) Low power
b) Control circuits of very high power
c) Both a and b
d) None of the above
Answer: option c
Explanation:
The relays operate on low power and can be used to control a circuit

26 **What are the elements of ladder logic?**
a) Normally open (contact)
b) Normally Close (contact)
c) Both a and b
d) None of the above
Answer: option c
Explanation:
The normally open and normally close are the two elements of the ladder logic

27 **What is the standard form of FBD?**

a) Functional Block DiagramFirst Block DiagramFunctional Block DivisionNone of the above
b) First Block Diagram
c) Functional Block Division
d) None of the above
Answer: option a
Explanation:
The standard form of FBD is Functional Block Diagram

28 **What are the components that are used to make relay _____**
a) Electromagnet
b) Spring
c) Armature
d) All of the above
Answer: option d
Explanation:
The electromagnet, spring, and armature are the components that are used to make relays

29 **Why programmable logic controllers are required?**
a) It reduces the efforts of human begins
b) To get the maximum efficiency
c) To reduce the complex circuitry of entire system
d) All of the above
Answer: option d
Explanation:
The programmable logic controllers are required to reduce the human begins efforts, to get the maximum efficiency, and to reduce the complex circuitry of the entire system

30 **_____ is an example for input modules in programmable logic controller**
a) Switches
b) Pushbuttons
c) Lamps
d) Both a and b
Answer: option d
Explanation:
The switches and pushbuttons are examples of input modules in the programmable logic controller

31 **_____ is an example for output modules in the programmable logic controller**
a) Switches
b) Alarms
c) Lamps
d) Both b and c
Answer: option d

Explanation:
The lamps and alarms are examples of output modules in the programmable logic controller

32 **How many inputs does a unitary programmable logic controller have?**
a) 10, 15
b) 15, 20
c) 20-40
d) 20, 12
Answer: option d
Explanation:
The unitary programmable logic controller has 20 inputs and 12 outputs

33 **How many input and output pins do a small programmable logic controller have?**
a) 10
b) 30
c) 50
d) 128
Answer: option d
Explanation:
The small programmable logic controller has a total of 128 input and output pins

34 **_____ is connected to the PLC input**
a) Indicating lamp
b) Field sensors
c) Both a and b
d) None of the above
Answer: option b
Explanation:
The field sensors are one type of input device that is connected to the PLC input

35 **The programmable logic controller works on _____**
a) Parallel mechanism
b) Sequential mechanism
c) Both a and b
d) None of the above
Answer: option b
Explanation:
The programmable logic controller works on the sequential mechanism

36 **How many input and output pins do a nano programmable logic controller have?**
a) 16
b) 30
c) 50
d) 128

Answer: option a
Explanation:
The nano programmable logic controller has a total of 16 input and output pins

37 **How many input and output pins do a micro programmable logic controller have?**
a) 32
b) 30
c) 50
d) 128
Answer: option a
Explanation:
The micro programmable logic controller has a total of 32 input and output pins

38 _____ **can be connected to the analogue output of the programmable logic controller**
a) Control valve
b) Level transmitter
c) Flow transmitter
d) None of the above
Answer: option a
Explanation:
The control valve can be connected to the analog output of the programmable logic controller

39 _____ **provides the voltage to PLC primary components**
a) Control valve
b) Level transmitter
c) Flow transmitter
d) Power supply
Answer: option d
Explanation:
The power supply provides the voltage needed to run the PLC primary components

40 **Which type of memory is used in PLC?**
a) Random Access Memory
b) Read Only Memory
c) Both a and b
d) None of the above
Answer: option c
Explanation:
The type of memories used in PLCs are read-only memory and random access memory to stores the information, program, and data in a PLC

05 – PLC Hardware and Programming	Marks:-16
Content of Unit :- 5.1 Block diagram & specification of AC input module 5.2 Block diagram & specification of DC input module 5.2.1 Sinking & Sourcing concept in DC module 5.3 Block diagram & specification of Analog input output module 5.3.1 Analog input PLC module diagram and specification 5.3.2 Analog output PLC module specification 5.4 I/O addressing of PLC 5.4.1 Addressing of data files & different types of addressing 5.5 PLC instruction set 5.5.1 Relay instruction, timer instruction 5.5.2 PLC instruction set - counter instruction, data movement instruction 5.5.3 PLC instruction set -logical & comparison instruction 5.6 PLC programming - Ladder programming language	

1. Which one is the correct sequence for PLC operation?
   a) Self-test, input scan, logic scan, output scan
   b) Self-test, logic scan, output scan, input scan
   c) Self-test, input scan, output scan, logic scan
   d) None of the above

Answer: a

Explanation: The correct sequence for PLC operation is self-test, input scan, logic scan, output scan 2)

2. electromagnetic relays are constructed with _____
   a) Electrical components
   b) Mechanical components
   c) Electromechanical components
   d) None of the above

Answer: c

Explanation: The electromagnetic relays are constructed with electromechanical components, and an operating coil and mechanical contacts

3. The DC and AC relays works on_____principle
   a. Motors
   b. Electromagnetic induction
   c. Electromechanical components
   d. None of the above

Answer: b

Explanation: The DC and AC relays both works on the electromagnetic induction principle but the construction is somewhat differentiate

4. The attraction type electromagnetic relays works with _____

a. AC supply
b. DC supply
c. Both ac and dc supply
d. None of the above

Answer: c

Explanation: The attraction type electromagnetic relays works on both AC and DC supply that attract a metal bar or piece of metal

5. In PLC the user can write the programs with the help of _____

a. Optical isolation
b. Sensing devices
c. Programming devices
d. N one of the above

Answer: c

Explanation: In PLC the user can write the programs with the help of programming devices, the programming devices is an interface between PLC and the user

6. The system that is used to direct, regulate or command itself

a) Open-loop
b) Close-loop
c) Both A and D
d) Control system

Answer: d

Explanation: The control system is used to direct, regulate or command itself

7). In which control system feedback is available?

a) Open-loop
b) Close-loop
c) Both A and D
d) None of the above

Answer: b

Explanation: The feedback is available in a closed-loop control system

.8). Relays is a_____device

a) Electrical devices

b) Electromechanical devices

c) Mechanical devices

d) None of
the above
Answer: b
Explanation: The relays are electromechanical
devices

.9). Which one is the PLC programming language?

a) HMI

b) MMI

c) FBD

d) None of
the above
Answer: c

Explanation: The functional block diagram is one type of programmable logic controller programming language.

10). The standard form of PLC is _____

a) Programmable Logic Controller

b) Programmable Load Controller

c) Pressure Load Controller

d) None of
the above
Answer: a
Explanation: The standard form of PLC is Programmable Logic Controller, it is one type of logic controller

11). The ladder logic in PLC consists of _____

a) Logic gates

b) Functional blocks

c) Relay contacts and coils

d) R
e
l
a
y
s
A

n
s
w
e
r
:

d
Explanation: The ladder logic in PLC consists of
relays

12)._____is an example for office
automation?
a) Rocket launching
b) Street solar lightening
c) Automated bottle filling stations
d) Printers, CCTV
camerasAnswer: d
Explanation: The printers and CCTV cameras are an example for office automation.

13). The relays operates on _____
a) Low power
b) Control circuits of very high power
c) Both a and b
d) None of
the above
Answer: a
Explanation: The relays operate on low power and can be used to control a circuit

14). What is the standard form of IEC?
a) International Electrotechnical Commission

b) International Electrical Commission

c) International Electrical Commission

d) None of
the above
Answer: a
Explanation: The standard form of IEC is the International Electrotechnical Commission

15). Which one is the oldest programming language?
a) Ladder logic

b) Function block diagram

c) Structured text programming

d) None of

the above
Answer: a
Explanation: The ladder logic is one type of oldest programming language

16). What are the elements of ladder logic?

a) Normally open (contact)

b) Normally Close (contact)

c) Both a and b

d) None of the above

Answer: C
Explanation: The normally open and normally close are the two elements of the ladder logic.

17)._____is an example for building automation?

a) Rocket launching

b) Street solar lightening

c) Automated bottle filling stations

d) Smoke detectors

Answer: d
Explanation: The smoke detectors are an example of building automation.

_____

18). Relays are used in

a) Washing machines

b) Refrigerators

c) Water heaters

d) All of the above

Answer: d
Explanation: Relays are used in our day-to-day devices like washing machines, refrigerators, water heaters, etc.

19). The standard form of STL is _ _____

a) Step Transformer Line

b) Step Ladder Diagram

c) Step Transient Line

d) None of the above

Answer: b

Explanation: The full form of STL is Step Ladder Diagram, it is one type of programming method used to write a code or program.

20). What is the standard form of FBD?

a) Functional Block Diagram

b) First Block Diagram

c) Functional Block Division

d) None of the above

Answer: a

Explanation: The standard form of FBD is Functional Block Diagram.

21). _____is an example for industrial automation?

a) Rocket launching

b) Street solar lightening

c) Automated bottle filling stations

d) Smoke detectors

Answer: c

Explanation: The automated bottle filling stations is an example of industrial automation.

22). What are the components that are used to make relay _____

a) Electromagnet

b) Spring

c) Armature

d) All

of the
above
Answer:
d
Explanation: The electromagnet, spring, and armature are the components that are used to make relays.

23). The steel factories is an example for_____automation

a) Building automation

b) Office automation

c) Scientific automation

d) Industrial
automation

Answer: d
Explanation: The steel factories is an example of industrial automation.
24). Why programmable logic controllers are required?

a) It reduces the efforts of human begins

b) To get the maximum efficiency

c) To reduce the complex circuitry of entire system

d) All
of the
above
Answer:
d
Explanation: The programmable logic controllers are required to reduce the human begins efforts, to get the maximum efficiency, and to reduce the complex circuitry of the entire system.

25). What is the standard form of MODICON?

a) Main Digital Controller

b) Modular Digital Controller

c) Modular Digital Communication

d) None of
the above

Answer: b
Explanation: The standard form of MODICON is Modular Digital Controller

26). Which mode accepts and converts signals from sensors into a logic signal?

a) Input module

b) Output modular

c) Both a and b

d) None of
the above
Answer: a
Explanation: The input module accepts and converts signals from sensors into a logic signal.

27)._____is an example for input modules in programmable logic controller
a) Switches

b) Pushbuttons

c) Lamps

d) B
oth a
and b
Answ
er: d
Explanation: The switches and pushbuttons are examples of input modules in the programmable logic controller

28)._____is an example for output modules in the programmable logic controller

a) Switches

b) Alarms

c) Lamps

d) B
oth b
and c
Answ
er: d
Explanation: The lamps and alarms are examples of output modules in the programmable logic controller

29). Which is not a graphical programming language for the programmable logic controller?
a) Ladder logic

b) Structures text

c) Functional block diagram

d) Sequential
function chart
Answer: b

Explanation: The structured text is not a graphical programming language for the programmable logic controller

30). How many inputs does a unitary programmable logic controller have?a)
10, 15
b) 15, 20

c) 20-40

d) 20, 12

Answer: d

Explanation: The unitary programmable logic controller has 20 inputs and 12 outputs.

31). How many input and output pins do a small programmable logic controller have?
a) 10

b) 30

c) 50

d) 128

Answer: d

Explanation: The small programmable logic controller has a total of 128 input and output pins.

32)._____is connected to the PLC input
a) Indicating lamp
b) Field sensors

c) Both a and b

d) None of
the above
Answer: b
Explanation: The field sensors are one type of input device that is connected to the PLC input

. 33)._____is the device that can't be connected to the PLC output
a) Pressure Transmitter

b) Motor

c) Control valve

d) None of the above

Answer: a

Explanation: The pressure transmitter is the device that can't be connected to the PLC output.

34). The programmable logic controller works on _____

a) Parallel mechanism

b) Sequential mechanism

c) Both a and b

d) None of the above

Answer: b

Explanation: The programmable logic controller works on the sequential mechanism.

35). How many input and output pins do a nano programmable logic controller have?

a) 16

b) 30

c) 50

d) 128

Answer: a

Explanation: The nano programmable logic controller has a total of 16 input and output pins

36). How many input and output pins do a micro programmable logic controller have?

a) 32

b) 30

c) 50

d) 128

Answer: a

Explanation: The micro programmable logic controller has a total of 32 input and output pins

37)._____can be connected to the analogue output of the programmable logic controller

a) Control valve

b) Level transmitter

c) Flow transmitter

d) None of the above

Answer: a

Explanation: The control valve can be connected to the analog output of the programmable logic controller

38)._____provides the voltage to PLC primary components

a) Control valve

b) Level transmitter

c) Flow transmitter

d) Power supply

Answer: d

Explanation: The power supply provides the voltage needed to run the PLC primary components

39). Which type of memory is used in PLC?

a) Random Access Memory

b) Read Only Memory

c) Both a and b

d) None of the above

Answer: c

Explanation: The type of memories used in PLCs are read-only memory and random access memory to stores the information, program, and data in a PLC

40). The CPU consists of _____

a) Arithmetic Logic Unit

b) Internal memory of CPU

c) Internal timers, counters, flags

d) All of the above

Answer: d

Explanation: The CPU consists of ALU, internal memory of CPU, and internal timers, counters, flags.

41. The below rung would represent what Boolean equation?

```
|--] [-----]/[-----( )--|
    X         Y         Z
```

a) X • Y = Z

b) X + Y = Z

c) X • Y' = Z

d) None of the above. Answer: c

42. An NOR function implemented in ladder logic uses:

Mnemonic	Name	Symbol	Description
XIC	Examine If Closed	?] [	Examines a bit for an On (set, high) condition.
XIO	Examine If Open	?]/[	Examines a bit for an Off (cleared, low) condition.
OTE	Output Energize	?( )	When rung conditions are true, the OTE will either set or clear the data bit.
OTL	Output Latch	?(L)	When enabled, the instruction signals to the controller to turn on the addressed bit. The bit remains on, regardless of the rung condition.
OTU	Output Unlatch	?(U)	When enabled, it clears (unlatches) the data bit. The bit remains Off, regardless of rung condition.

a) Normally-closed contacts in series

b) Normally-open contacts in series

c) A single normally-closed contact

d) Normally-open contacts in parallel

e) Normally-closed contacts in paralle

Answer: a

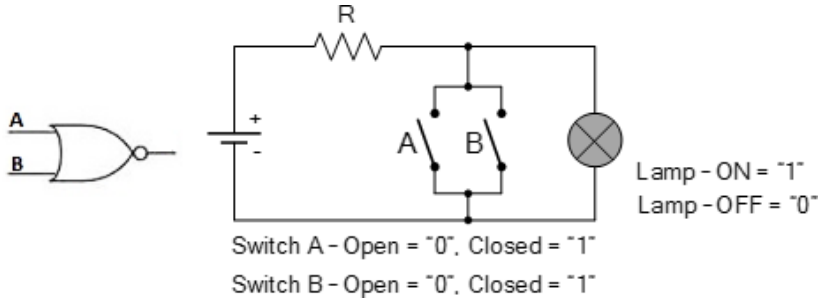

43. An OR function implemented in ladder logic uses:

a) Normally-closed contacts in series

b) Normally-open contacts in series

c) A single normally-closed contact

d) Normally-open contacts in parallel

e) Normally-closed contacts in parallel

Answer: d

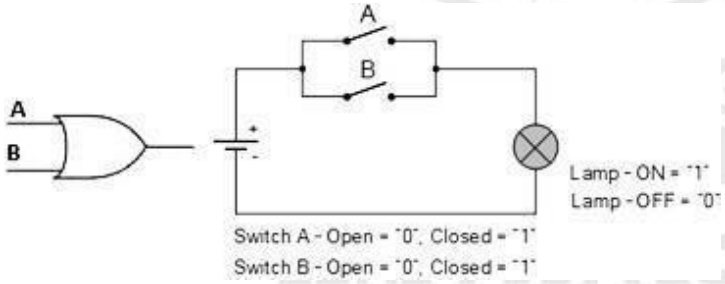

44. An NAND function implemented in ladder logic uses:

a) Normally-closed contacts in series

b) Normally-open contacts in series

c) A single normally-closed contact

d) Normally-open contacts in parallel

e) Normally-closed contacts in parallel

Answer: b

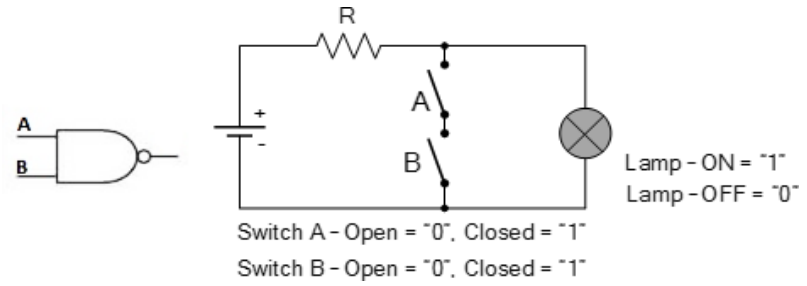

45. An AND function implemented in ladder logic uses:

a) Normally-closed contacts in series

b) Normally-open contacts in series

c) A single normally-closed contact

d) Normally-open contacts in parallel

e) Normally-closed contacts in parallel

Answer: b

Explanation:

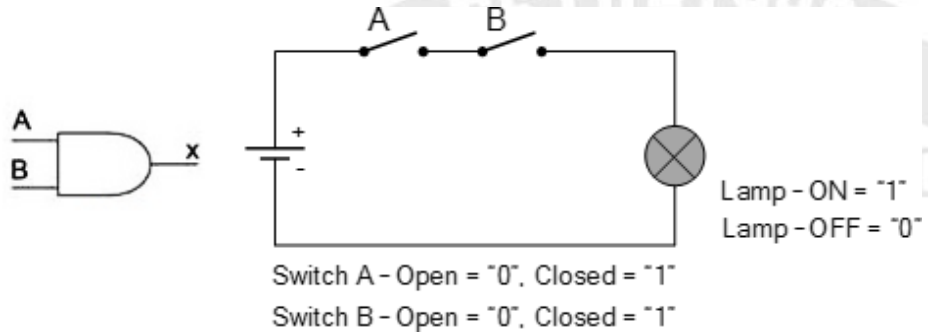

46. ON delay timer instruction:

a) Used to turn an output ON or OFF after the timer has been on for preset time interval.

b) Used to turn an input ON or OFF after the timer has been on for preset time interval.

c) Used to turn an output OFF after the timer has been on for preset time interval.

d) Used to turn an output ON after the timer has been on for preset time interval.

Answer: a Explanation:

ON Delay Timer Instruction: TON instruction is used to turn an output on or off after the timer has been on for a preset time interval.

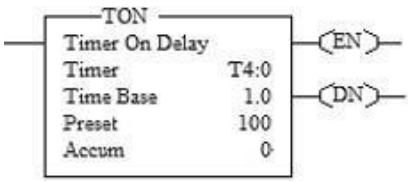

47. The Boolean representation of this PLC program is:

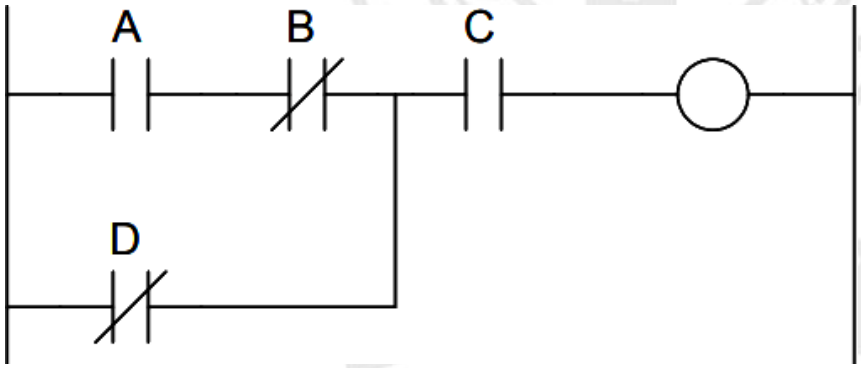

a) ABC + D

b) C + (A + B)D

c) C + D(A + B)

d) ABC + BD

e) C(AB + D)

Answer: e

Explanation: C(AB + D)

48. The programmable logic controllers are used in _____

a) Manufacturing

b) Automation

c) Both a and b

d) None of the above

Answer: c

Explanation: The PLC is extensively used in manufacturing and automation. Its purpose is to monitor crucial process parameters and to adjust process operation accordingly

49. What are the components that make the programmable logic controller work?

e. Input and output module

f. CPU

g. Power supply

h. All of the above

Answer: d

Explanation : The input module, output module, CPU, and power supply are the components that make the programmable logic controller work

50). The programmable logic controllers are used in _____

a. Manufacturing

b. Automation

c. Both a and b

d. None of the above

Answer: c

Explanation: The PLC is extensively used in manufacturing and automation. Its purpose is to monitor crucial process parameters and to adjust process operation accordingly

51). What are the components that make the programmable logic controller work?

a. Input and output module

b. CPU

c. Power supply

d. All of the above

Answer: d

Explanation : The input module, output module, CPU, and power supply are the components that make the programmable logic controller work

52). The programmable logic controller is classified into _____

a. One

b. Two

c. Three

d. Four

Answer: b

Explanation: The programmable logic controller is classified into two types they are fixed PLC and modular PLC

53). In fixed programmable logic controller _____

a. Input is fixed

b. Output is fixed

c. Both a and b

d. None of the above

Answer: c

Explanation: In fixed programmable logic controller both input and output modules are fixed whereas in modular PLC the input and output modules are not fixed

54). The PLC's can be programmed in _____

a. Ladder logic, structured text

b. Instruction list, Functional block diagram

c. Sequential function chart

d. All of the above

Answer: d

Explanation: The programmable logic controllers can be programmed in ladder logic, structured text, instruction list, functional block diagram, and sequential function chart

55). In modular programmable logic controller _____

a. Input is fixed

b. Output is fixed

c. Both a and b

d. None of the above

Answer: c

Explanation : In modular PLC the input and output modules are expandable whereas in fixed programmable logic controller both input and output modules are fixed

56). What are the types of programmable logic controllers?

a. Fixed, uniform PLC

b. Modular, uniform PLC

c. Fixed and Modular PLC

d. None of the above

Answer: c

Explanation: The PLC's are classified into two types they are: fixed programmable logic controller and modular programmable logic controller

57). The components that make PLC works can be divided into_____core areas

a. One

b. Two

c. Three

d. Four

r
A
n
s
w
e
r
:

c
Explanation: The components that make PLC works can be divided into three core areas they areinput/output, CPU, rack, and power supply

58). How many operation steps does the programmable logic controller have?

a. One
b. Two
c. Three
d. F
o
u
r
A
n
s
w
e
r
:

c
Explanation: The programmable logic controller operation is of three steps they are input scan, output scan, and program scan

59). In PLC operation_____checks the status at the input side

a) Input scan

b) Output scan

c) Program scan

d) None of
the above
Answer: a
Explanation: The input scan checks the status at the input side in the programmable logic controller operation

60). In PLC operation_____retrieves the data into an output module

a) Input scan

b) Output scan

c) Program scan

d) None of the above

Answer: b

Explanation: In PLC operation output scan retrieves the data into an output module, so that all the outputs are updated

61). Before PLC's was created many industries used _____

a) Relays

b) Capacitors

c) Resistors

d) None of the above

Answer: a

Explanation: The hundreds and thousands of relays are used in industries when programmable logic controllers are not developed

62). Which is the first PLC model?

a) PLC 084

b) PLC 085

c) PLC 086

d) None of the above

Answer: a

Explanation: The PLC 084 is the first designed programmable logic controller model

63). The relays consist of_____

a) Control circuit

b) Load circuit

c) Both a and b

d) None of
the above
Answer: c
Explanation: The relays consist of two separate and completely independent circuits one is called a control circuit and another one is called a load circuit

64). CCTV cameras is an example for_____

a) Building automation

b) Office automation

c) Scientific automation
d) Industrial automationAnswer: b

Explanation: The CCTV cameras come under office automation

65). The control logic in a programmable logic controller can be programmed by _____

a) FBD , ladder logic

b) Sequential logic

c) Structured text

d) All
of the
above
Answer:
d
Explanation: The control logic in a programmable logic controller can be programmed using different programming languages some of them are FBD, ladder logic, sequential logic, & structured text

66). Who invented the Programmable Logic Controller (PLC)?

Jonas Wenstrom

a) Dick Morley

b) Thomas Davenport

c) None of

the above
Answer: a
Explanation: The Programmable Logic Controller (PLC) is invented by Dick Morley in 1964

67). The programmable logic controllers are used in _____

a) Glass and paper industry

b) Process automation plants

c) Cement manufacturing

d) All of the above

Answer: a
Explanation: The PLCs are used in many industries some examples are the glass and paper industry, process automation plants, cement manufacturing, etc.

68). In modular type PLC, the PLC's are classified into _____

a) Relay output PLC

b) Transistor output PLC

c) Triac output PLC

d) All of the above

Answer: d
Explanation: In modular type PLC, the PLCs are classified into three types they are relay type PLC, transistor output PLC, and Triac output PLC.

69). The programmable logic controllers are classified into_____according to physical size inmodular type PLC

a) Mini PLC, Micro PLC

b) Micro PLC, Nano PLC

c) Nano PLC, Mini PLC, Macro PLC

d) None of the above

Answer: c
Explanation: The programmable logic controllers are classified into three types according to physical size in modular type PLC they are mini, micro, and nano PLC.

70). The advantages of PLC are _____

a) Easy maintenance

b) Reliability is high

c) Small in size

d) All of the above

Answer: d

Explanation: The programmable logic controllers are small in size, reliability is very high, and the maintenance of these controllers are very easy

71). The CPU has _____

a) Memory system

b) Processor

c) Power supply

d) All of the above

Answer: d

Explanation: The CPU is a control portion of the programmable logic controller that consists of a memory system, processor, and power supply.

72). The visual programming language also called as _____

a) Relay logic

b) Ladder logic

c) Controller logic

d) All of the above

Answer: c

Explanation: The visual programming language also called ladder logic

73). _____are the components that are required to change or create a program

a) PLC, programming device

b) Programming software

c) Connector cable

d) All of the above

Answer: d

Explanation: The components that are required to change or create a program are PLC, programming device and software, and connector cable.

74). _____is an example for light automation?

a) Rocket launching

b) Street solar lightening

c) Automated bottle filling stations

d) Smoke detectors

Answer: b

Explanation: The street solar lightning is an example of light automation

75). In the water level storage tank, the manual mode program controls the water level by monitoring the _____switch input

a) Low sensor switch

b) High sensor switch

c) Both a and b

d) None of the above

Answer: a

Explanation: In the manual mode when the low sensor switch is off the pump motor turns off and similarly when the low sensor switch turns on the pump motor turns on

76). The sequences are classified into _____

a) One

b) Two

c) Three

d) F
o
u
r
A
n
s
w
e
r
:

c
Explanation: The sequences are classified into three types they are single sequence, complicated single sequence, and multiple sequences

77). _____is an example for scientific automation?

a) Rocket launching

b) Street solar lightening

c) Automated bottle filling stations

d) Smok
e detectors
Answer: a
Explanation: The rocket launching is an example of scientific automation

78). The PLC internally operates, stores, and calculates the value in _____

a) Binary format

b) Decimal format

c) Octal format

d) None of
the above
Answer: a
Explanation: The PLC stores operate and calculate the value in a binary number format

79). The DVP-PLC external input-output points are numbered in_____format

a) Binary format

b) Decimal format

c) Octal format

d) None of

the above
Answer: c
Explanation: The DVP-PLC external input-output points are numbered in octal format

80. The programmable logic controller is classified into _____

a) One

b) Two

C) Three

A
n
s
w
e
r
:

b
Explanation: The programmable logic controller is classified into two types they are fixed PLC and modular PLC

81. In fixed programmable logic controller _____

a) Input is fixed

b) Output is fixed

c) Both a and b

d) None of
the above
Answer:
c
Explanation: In fixed programmable logic controller both input and output modules are fixed whereas in modular PLC the input and output modules are not fixed

82.The PLC's can be programmed in _____

a) Ladder logic, structured text

b) Instruction list, Functional block diagram

c) Sequential function chart

d) All of the above

Answer: d

Explanation: The programmable logic controllers can be programmed in ladder logic, structured text, instruction list, functional block diagram, and sequential function chart

83. .In modular programmable logic controller _____

a) Input is fixed

b) Output is fixed

c) Both a and b

d) None of the above

Answer: c

Explanation : In modular PLC the input and output modules are expandable whereas in fixed programmable logic controller both input and output modules are fixed

84.What are the types of programmable logic controllers?

a) Fixed, uniform PLC

b) Modular, uniform PLC

c) Fixed and Modular PLC

d) None of the above

Answer: c

Explanation: The PLC's are classified into two types they are: fixed programmable logic controller and modular programmable logic controller

85.The components that make PLC works can be divided into_____core areas

a) One

b) Two

c) Three

d) Four

n
s
w
e
r
:

c
Explanation: The components that make PLC works can be divided into three core areas they areinput/output, CPU, rack, and power supply

86.How many operation steps does the programmable logic controller have?

a) One

b) Two

c) Three

d) F
o
u
r
A
n
s
w
e
r
:

c
Explanation: The programmable logic controller operation is of three steps they are input scan, output scan, and program scan

87. In PLC operation_____checks the status at the input side

a) Input scan

b) Output scan

c) Program scan

d) None of
the above
Answer: a
Explanation: The input scan checks the status at the input side in the programmable logic controller operation

88. In PLC operation_____retrieves the data into an output module

a) Input scan

b) Output scan

c) Program scan

d) None of the above

Answer: b

Explanation: In PLC operation output scan retrieves the data into an output module, so that all the outputs are updated

89. Before PLC's was created many industries used _____

a) Relays

b) Capacitors

c) Resistors

d) None of the above

Answer: a

Explanation: The hundreds and thousands of relays are used in industries when programmable logic controllers are not developed

90. Which is the first PLC model?

a) PLC 084

b) PLC 085

c) PLC 086

d) None of the above

Answer: a

Explanation: The PLC 084 is the first designed programmable logic controller model

91. The relays consist of_____

a) Control circuit

b) Load circuit

c) Both a and b

d) None of the above

Answer: c

Explanation: The relays consist of two separate and completely independent circuits one is called a control circuit and another one is called a load circuit

92. CCTV cameras is an example for_____

a) Building automation

b) Office automation

c) Scientific automation
d) Industrial automation
Answer: b
Explanation: The CCTV cameras come under office automation

93. The control logic in a programmable logic controller can be programmed by _____

a) FBD , ladder logic

b) Sequential logic

c) Structured text

d) All of the above
Answer: d
Explanation: The control logic in a programmable logic controller can be programmed using different programming languages some of them are FBD, ladder logic, sequential logic, & structured text

94. Who invented the Programmable Logic Controller (PLC)?

Jonas Wenstrom

a) Dick Morley

b) Thomas Davenport

c) None of the above
Answer: a
Explanation: The Programmable Logic Controller (PLC) is invented by Dick Morley in 1964

95. The programmable logic controllers are used in _____

a) Glass and paper industry

b) Process automation plants

c) Cement manufacturing

d) All of the above
Answer: a
Explanation: The PLCs are used in many industries some examples are the glass and paper industry, process automation plants, cement manufacturing, etc.

96. In modular type PLC, the PLC's are classified into _____

a) Relay output PLC

b) Transistor output PLC

c) Triac output PLC

d) All of the above

Answer: d

Explanation: In modular type PLC, the PLCs are classified into three types they are relay type PLC, transistor output PLC, and Triac output PLC.

97. The programmable logic controllers are classified into_____according to physical size inmodular type PLC

a) Mini PLC, Micro PLC

b) Micro PLC, Nano PLC

c) Nano PLC, Mini PLC, Macro PLC

d) None of the above

Answer: c

Explanation: The programmable logic controllers are classified into three types according to physical size in modular type PLC they are mini, micro, and nano PLC.

98. The advantages of PLC are _____

a) Easy maintenance

b) Reliability is high

c) Small in size

d) All of the above

Answer: d

Explanation: The programmable logic controllers are small in size, reliability is very high, and the maintenance of these controllers are very easy

99. The CPU has _____

a) Memory system

b) Processor

c) Power supply

d) All of the above

Answer: d

Explanation: The CPU is a control portion of the programmable logic controller that consists of a memory system, processor, and power supply.

100. The visual programming language also called as _____

a) Relay logic

b) Ladder logic

c) Controller logic

d) All of the above

Answer: c

Explanation: The visual programming language also called ladder logic

101. _____are the components that are required to change or create a program

a) PLC, programming device

b) Programming software

c) Connector cable

d) All of the above

Answer: d

Explanation: The components that are required to change or create a program are PLC, programming device and software, and connector cable.

102. _____is an example for light automation?

a) Rocket launching

b) Street solar lightening

c) Automated bottle filling stations

d) Smoke detectors

Answer: b

Explanation: The street solar lightning is an example of light automation

103. In the water level storage tank, the manual mode program controls the water level by monitoring the _____switch input

a) Low sensor switch

b) High sensor switch

c) Both a and b

d) None of the above

Answer: a

Explanation: In the manual mode when the low sensor switch is off the pump motor turns off and similarly when the low sensor switch turns on the pump motor turns on

104. The sequences are classified into _____

a) One

b) Two

c) Three

d) Four

Explanation: The sequences are classified into three types they are single sequence, complicated single sequence, and multiple sequences

105. _____is an example for scientific automation?

a) Rocket launching

b) Street solar lightening

c) Automated bottle filling stations

d) Smok detector

Answer: a

Explanation: The rocket launching is an example of scientific automation

106. The PLC internally operates, stores, and calculates the value in _____

a) Binary format

b) Decimal format

c) Octal format

d) None of the above

Answer: a

Explanation: The PLC stores operate and calculate the value in a binary number format

107. The DVP-PLC external input-output points are numbered in_____format

a) Binary format

b) Decimal format

c) Octal format

d) None of the above

Answer: c

Explanation: The DVP-PLC external input-output points are numbered in octal format

Prepared By Mr. Tupe S.G	**Verified By** Ms. Jarad U.T Module Coordinator	**Re-Verified By** Ms. Navale S.N Academic Coordinator	**Approved By** Mr. Tupe S.G HoD EJ