Zeal Education Society's

ZEAL POLYTECHNIC, PUNE.

NARHE | PUNE -41 | INDIA

SECOND YEAR (SY)

DIPLOMA IN ELECTRONICS AND TELECOMMUNICATION ENGINEERING

SCHEME: I **SEMESTER: IV**

NAME OF SUBJECT: MICROCONTROLLER AND APPLICATIONS
SUBJECT CODE: 22426

MSBTE QUESTION PAPERS & MODEL ANSWERS

1. **MSBTE SUMMER-19 EXAMINATION**
2. **MSBTE WINTER-19 EXAMINATION**

22426

21819

3 Hours / 70 Marks Seat No. | | | | | | | | |

Instructions – (1) All Questions are *Compulsory.*

(2) Answer each next main Question on a new page.

(3) Illustrate your answers with neat sketches wherever necessary.

(4) Figures to the right indicate full marks.

(5) Assume suitable data, if necessary.

(6) Mobile Phone, Pager and any other Electronic Communication devices are not permissible in Examination Hall.

Marks

1. Attempt any FIVE of the following: **10**

a) State any four important features of 8051 microcontroller.

b) Find out the number of address lines required to access 4 KB of RAM.

c) List out any two instructions of following addressing modes:

(i) Immediate addressing

(ii) Register addressing.

d) Draw the format of SCON register.

e) Compare 8951 and 8031 derivatives of 8051 on the basis of:

(i) RAM in bytes

(ii) Timers used.

f) Draw interfacing diagram of 4x4 keyboard matrix with 8051 microcontroller.

g) Define the term BUS related to microprocessor/controller and list different buses used in microcontroller.

Marks

2. Attempt any THREE of the following: 12

a) Draw the interfacing of stepper motor and write an ALP to rotate in anticlockwise direction.

b) Describe power down mode and ideal mode of 8051 with circuit diagram. Which SFR is used to set these modes and draw the same.

c) State the alternative functions of port 3 of 8051 microcontroller.

d) Sketch interfacing diagram of 2 Kbyte RAM and 2 Kbyte EPRAM to 8051. Draw the memory map .

3. Attempt any THREE of the following: 12

a) Draw the format of PSW register of 8051 microcontroller and explain the function of each bit.

b) Develop an ALP to generate square wave of 2 kHz on port pin P2.1 generate delay using timer 0 in mode 1. Assume crystal frequency of 11.0592 MHz.

c) State and explain the need of the following development tools microcontroller board:

(i) Editor

(ii) Assembler

(iii) Compiler

(iv) Linker

d) List software and hardware interrupts used in 8051 with their vector addresses and priorities.

4. Attempt any THREE of the following: 12

a) Develop an 8051 based system for traffic light controlling. Draw interfacing diagram and write ALP for the same.

b) Compare Von–Neumana and Harvard Architecture (any four points).

c) List different timer modes of 8051 microcontroller and describe mode 2 with neat sketch.

d) Explain the interfacing diagram of DAC to 8051. Write an ALP to generate triangular waveform using DAC.

Marks

e) Develop an ALP to transmit message "MSBTE" serially at baud rate 4800 8 bit data, 1 stop bit. Assume crystal frequency of 11.0592 MHz.

5. Attempt any TWO of the following: 12

a) Explain the various selection factors of microcontroller suitable for application.

b) Develop a program to transfer block of 05 numbers. From memory location 50 H to 60 H.

c) Sketch 8051 interfacing diagram to interface 4 LED's and 4 switches. Interface switches to port O and LED to port 1 upper nibble. Develop an ALP to read status of switches and operate LED's as per switch status.

6. Attempt any TWO of the following: 12

a) Develop an ALP to read temperature from LM 35 sensor. Draw the interfacing diagram with 8051.

b) Develop a program to toggle the LED's after every 500 m sec connected to P1.0 and P1.1 after receiving the external interrupt on INTO.

c) Explain the following instructions.

SWAP A

ADD C

MUL AB

CJNE A, add, radd

MOV A, Ro

MOVX A, @ A + DPTR.

SUMMER-19 EXAMINATION

Subject Name: Microcontroller and applications Model Answer Subject Code: 22426

Important Instructions to examiners:

1) The answers should be examined by key words and not as word-to-word as given in themodel answer scheme.
2) The model answer and the answer written by candidate may vary but the examiner may tryto assess the understanding level of the candidate.
3) The language errors such as grammatical, spelling errors should not be given moreImportance (Not applicable for subject English and Communication Skills.
4) While assessing figures, examiner may give credit for principal components indicated in thefigure. The figures drawn by candidate and model answer may vary. The examiner may give credit for anyequivalent figure drawn.
5) Credits may be given step wise for numerical problems. In some cases, the assumed constantvalues may vary and there may be some difference in the candidate's answers and model answer.
6) In case of some questions credit may be given by judgement on part of examiner of relevant answer based on candidate's understanding.
7) For programming language papers, credit may be given to any other program based on equivalent concept.

Q. No.	Sub Q. N.	Answers	Marking Scheme
1	**(A)**	**Attempt any FIVE of the following:**	**10- Total Marks**
	(a)	**State any four important features of 8051 microcontroller.**	**2M**
	Ans:	**Features of 8051 microcontroller: (Any Four)** 1) 8- bit data bus and 8- bit ALU. 2) 16- bit address bus – can access maximum 64KB of RAM and ROM. 3) On- chip RAM -128 bytes (Data Memory) 4) On- chip ROM – 4 KB (Program Memory) 5) Four 8-bit bi- directional input/output ports Four 8-bit bi- directional input/ output ports. 6) Programmable serial ports i.e. One UART (serial port) 7) Two 16- bit timers- Timer 0& Timer 1 8) Works on crystal frequency of 11.0592 MHz 9) Has power saving and idle mode in microcontroller when no operation is performed. 10) Six interrupts are available: Reset, Two interrupts Timers i.e. Timer 0 and Timer 1, two	**Each correct feature: ½ Mark**

		external hardware interrupts- INT0 and INT1, Serial communication interrupt for both receive and transmit.	
	(b)	**Find out the number of address lines required to access 4 KB of RAM**	**2M**
	Ans:	12 address lines required to access 4 KB of RAM as 2^{12} = 4KB	**Calculation:1M** **Answer: 1M**
	(c)	**List out any two instructions of following addressing modes:** **(i) Immediate addressing.** **(ii) Register addressing.**	**2M**
	Ans:	(i) Immediate addressing instructions: 1. MOV A, #36H 2. MOV DPTR, #27A2H (ii) Register addressing. 1. MOV A, R0 2. MOV R7, A (NOTE: Consider any relevant correct instructions)	**Each instruction ½ M**
	(d)	**Draw the format of SCON register.**	**2M**
	Ans:	SM0 | SM1 | SM2 | REN | TB8 | RB8 | TI | RI SM0 SCON.7 Serial port mode specifier SM1 SCON.6 Serial port mode specifier SM2 SCON.5 Used for multiprocessor communication (Make it 0.) REN SCON.4 Set/ cleared by software to enable/ disable reception. TB8 SCON.3 Not widely used. RB8 SCON.2 Not widely used TI SCON.1 Transmit interrupt flag. Set by hardware at the beginning of the stop Bit in mode 1. Must be cleared by software.	**2M for format** **Bitwise explaination optional**

		RI SCON.0 Receive interrupt flag. Set by hardware halfway through the stop bit time in mode 1. Must be cleared by software.	
	e)	**Compare 8951 and 8031 derivatives of 8051 on the basis of :** **(i) RAM in bytes** **(ii) Timers used.**	**2M**
	Ans:		**Each Parameter : 1M**

Parameter	8951	8031
RAM in bytes	128 Bytes	128 Bytes
Timers used	Two 16bit Timers	Two 16bit Timers

	f)	**Draw interfacing diagram of 4×4 keyboard matrix with 8051 microcontroller.**	**2M**
	Ans:	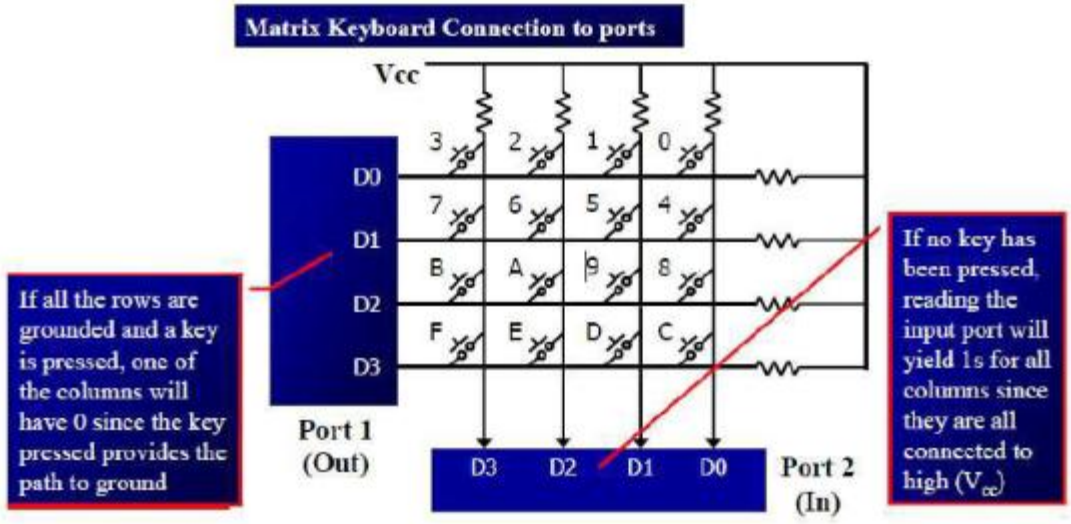 **OR**	**Diagram :2M**

		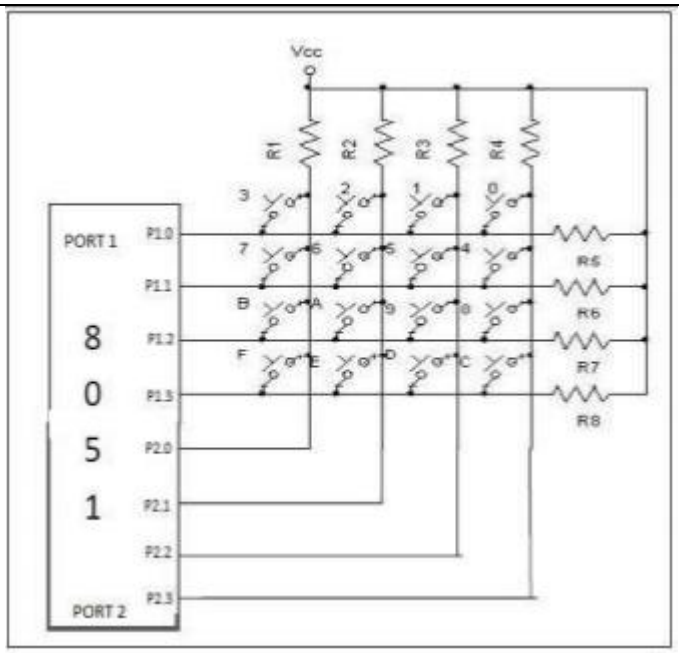	
	g)	**Define the term BUS related to microprocessor/controller and list different buses used in microcontroller.**	**2M**
	Ans:	**BUS:** A Bus is a set of physical connections used for communication between CPU and peripherals. **Different buses used in microcontroller are:** 1. Address Bus 2. Data Bus 3. Control Bus	**Define:1 M** **List:1M**

Q. No.	Sub Q. N.	Answers	Marking Scheme
2		**Attempt any THREE of the following:**	**12- Total Marks**
	a)	**Draw the interfacing of stepper motor and write an ALP to rotate in anticlockwise direction**	**4M**
	Ans:	**Interfacing diagram of stepper motor with 8051:**	**Diagram :2M**

		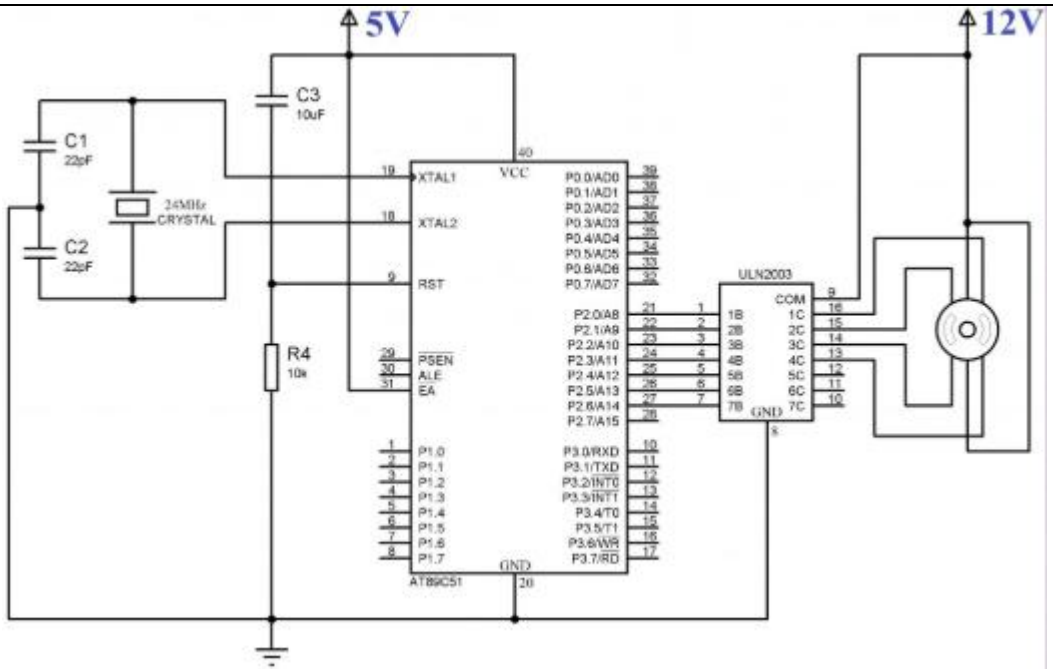
		OR
		 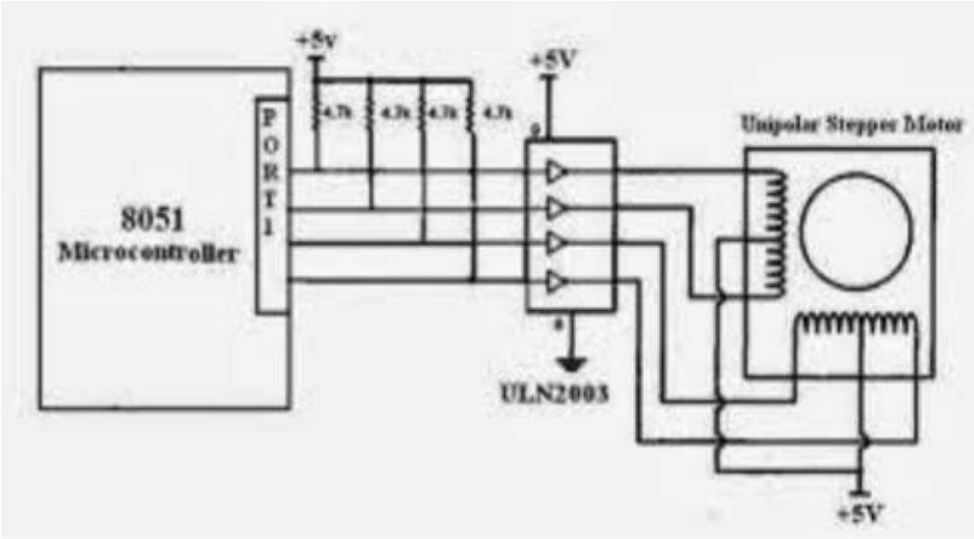
		ALP to rotate motor in anticlockwise direction:
		PROGRAM:
		MOV A, #66H ; load step sequence
		BACK: MOV P1, A ; issue sequence to motor
		AGAIN: RL A ; rotate left anticlockwise
		ACALL DELAY ; wait
		SJMP BACK ; keep going
		DELAY ; delay subroutine.
		MOV R2, #100
		H1: MOV R3, #255
			Program :2M

		H2: DJNZ R3, H2 DJNZ R2, H1 RET **(NOTE: Any other correct logic used for program should be considered)**	
	b)	**Describe power down mode and ideal mode of 8051 with circuit diagram . which SFR is used to set these modes and draw the same.**	**4M**
	Ans:	**IDLE MODE** In the Idle mode, the internal clock signal is gated off to the CPU, but not to the Interrupt, Timer and Serial Port functions. The CPU status is preserved in its entirety, the Stack Pointer, Program Counter, Program Status Word, Accumulator, and all other registers maintain their data during Idle. The port pins hold the logical state they had at the time idle mode was activated. ALE and PSEN hold at logic high levels. There are two ways to terminate the idle mode. i) Activation of any enabled interrupt will cause PCON.O to be cleared and idle mode is terminated. ii) Hard ware reset: that is signal at RST pin clears IDEAL bit IN PCON register directly. At this time, CPU resumes the program execution from where it left off. **POWER DOWN MODE** An instruction that sets PCON.1 causes that to be the last instruction executed before going into the Power Down mode. In the Power Down mode, the on-chip oscillator is stopped. With the clock frozen, all functions are stopped, but the on-chip RAM and Special Function Register are maintained held. The port pins output the values held by their respective SFRS. ALE and PSEN are held low. Termination from power down mode: an exit from this mode is hardware reset. Reset defines all SFRs but doesn't change on chip RAM **PCON (Power Control Register) SFR is used to set these modes.**	**Power down mode:1 M** **Idle Mode:1 M** **Identification of PCON:1 M** **PCON Format: 1M**

Format of PCON:

PCON: POWER CONTROL REGISTER. NOT BIT ADDRESSABLE.

SMOD	—	—	—	GF1	GF0	PD	IDL

SMOD Double baud rate bit. If Timer 1 is used to generate baud rate and SMOD = 1, the baud rate is double when the Serial Port is used in modes 1, 2, or 3.
— Not implemented, reserved for future use.*
— Not implemented, reserved for future use.*
— Not implemented, reserved for future use.*
GF1 General purpose flag bit.
GF0 General purpose flag bit.
PD Power Down bit. Setting this bit activates Power Down operation in the 80C51BH.
IDL Idle Mode bit. Setting this bit activates Idle Mode operation in the 80C51BH.

c) State the alternative functions of port 3 of 8051 microcontroller. **4M**

Ans: **Each pin function :1/2 M**

P3.0	RxD
P3.1	TxD
P3.2	$\overline{INT0}$
P3.3	$\overline{INT1}$
P3.4	T0
P3.5	T1
P3.6	$\overline{WR}$
P3.7	$\overline{RD}$

RXD it is used for serial input port
TXD it is used for serial output port
$\overline{INT0}$ used for external interrupt 0
$\overline{INT1}$ used for external interrupt 1
T0 Timer 0 external input
T1 Timer 1 external input
$\overline{WR}$ external data memory write strobe
$\overline{RD}$ external data memory Read strobe

d) Sketch interfacing diagram of 2 Kbyte RAM and 2Kbyte EPROM to 8051. Draw the memory map. **4M**

Ans:

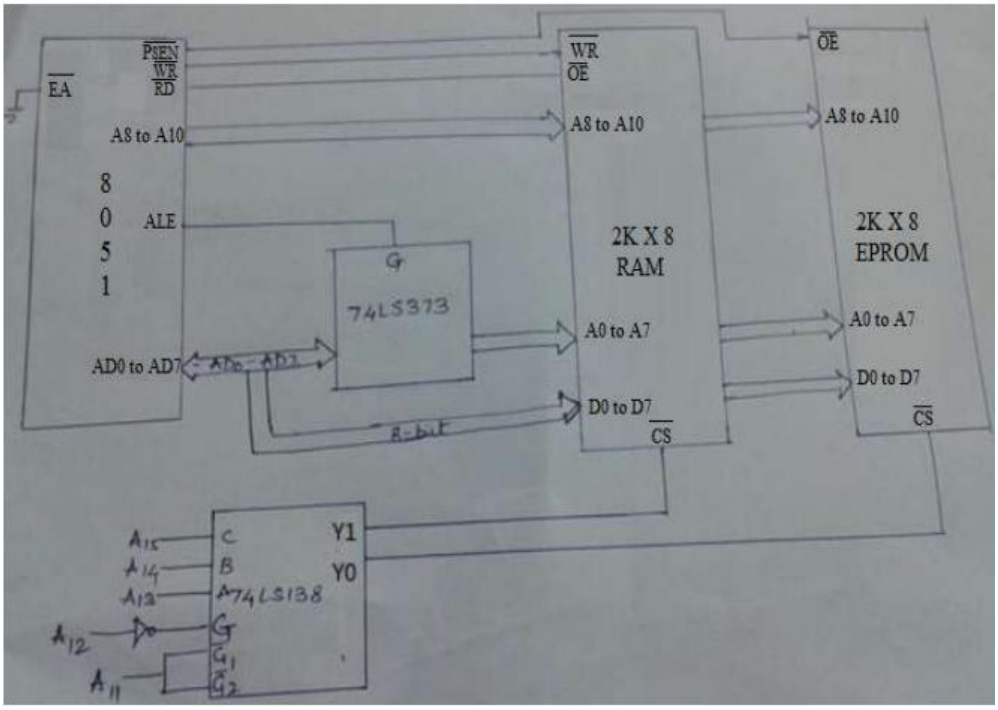

Memory Map:

	A15	A14	A13	A12	A11	A10	A9	A8	A7	A6	A5	A4	A3	A2	A1	A0	ADDR
Start addr of EPROM	0	0	0	0	0	0	0	0	0	0	0	0	0	0	0	0	**0000H**
End addr of EPROM	0	0	0	0	0	1	1	1	1	1	1	1	1	1	1	1	**07FFH**
Start addr of **RAM**	0	0	1	0	0	0	0	0	0	0	0	0	0	0	0	0	**2000H**
End addr of **RAM**	0	0	1	0	0	1	1	1	1	1	1	1	1	1	1	1	**27FFH**

Q. No.	Sub Q. N.	Answers	Marking Scheme
3		**Attempt any THREE of the following :**	**12- Total Marks**
	a)	**Draw the format of PSW register of 8051 microcontroller and explain the function of each bit.**	**4M**
	Ans:		**2M format, 2M function**

CY	AC	F0	RS1	RS0	OV	--	P

CY	PSW.7	Carry Flag.
AC	PSW.6	Auxiliary carry flag.
F0	PSW.5	Available to the user for general purpose.
RS1	PSW.4	Register bank selector bit 1.
RS0	PSW.3	Register bank selector bit 0.
OV	PSW.2	Overflow flag.
--	PSW.1	User- definable bit.
P	PSW.0	Parity flag. Set/cleared by hardware each instruction cycle to indicate and Odd/ even number of 1 bit in the accumulator.

1. CY: Carry flag.
This flag is set whenever there is a carry out from the D7 bit after an 8 bit addition or subtraction. It can also be set to 1 or 0 directly by instructions such as "SETB C" and CLR C" where "SETB C" stands for "set bit carry" and "CLR C" for "clear carry".
2. AC: Auxiliary carry flag
If there is a carry from D3 and D4 during an ADD or SUB operation, this bit is set; it is cleared. This flag is used by instructions that perform BCD (binary coded decimal) arithmetic.
3. F0: Available to the user for general purposes.
4. RS0, RS1: Register bank selects bits
These two bits are used to select one of the four register banks from internal RAM as shown in given table. The user can use only one bank of register at one time. By default , bank 0 gets selected.

RS1	RS0	Space in RAM
0	0	Bank 0 (00H- 07H)
0	1	Bank 1 (08H-0FH)
1	0	Bank2 (10H-17H)
1	1	Bank3 (18H-1FH)

5. OV: Overflow flag

		This flag is set whenever the result of a signed number operation is too large, causing the high- order bit to overflow into the sign bit. In general, the carry flag is used to detect errors in unsigned arithmetic operations. The overflow flag is only used to detect errors in signed arithmetic operations. **6. P: Parity flag** The parity flag reflects the number of 1s in the A (accumulator) register only. If the A register contains an odd number of 1s, then P=1. P=0 if A has an even number of 1s.	
	b)	**Develop an ALP to generate square wave of 2 kHz on port pin P2.1 generate delay using timer 0 in mode 1. Assume crystal frequency of 11.0592 MHz.**	**4M**
	Ans:	**<u>Calculation:</u>** Crystal frequency= 11.0592 MHz I/P clock = $(11.059 \times 10^6)/12$= 1000000 = 921.58KHz Tin = 1.085µ sec For 2 kHz square wave Fout = 2 KHz Tout = $1/ 2X 10^3$ = 0.5msec =500µ sec So $T_{ON} = T_{OFF}$ = 250µ sec N = T_{ON} / Tin = 250/1.085 = 230.41 65535 – 231+1 = $(65305)_{10} = (FF19)_{16}$ **<u>Program:-</u>** MOV TMOD, # 01H ; Set timer 0 in Mode 1, i.e., 16 bit timer L2: MOV TL0, # 19H ; Load TL register with LSB of count MOV TH0, # 0FFH ; load TH register with MSB of count SETB TR0 ; start timer 0 L1: JNB TF0, L1 ; poll till timer roll over CLR TR0 ; stop timer 0 CPL P2.1 ; complement port 2.1 line to get high or low CLR TF0 ; clear timer flag 0 SJMP L2 ; re-load timer with count as mode 1 is not auto reload	**1M-Calculation, 2M program, 1M comments**
	c)	**State and explain the need of the following development tools microcontroller board:** **(i) Editor** **(ii) Assembler** **(iii) Compiler** **(iv) Linker**	**4M**
	Ans:	**1) Editor:** An editor is a program which helps you to construct your assembly language program in right format so that the assembler will translate it correctly to machine language. So, you can type your program using editor. This form of your program is called as source program and extension of program must be .asm or .src depending on which assembler is	**1M each**

used. The DOS based editor such as EDIT, WordStar, and Norton Editor etc. can be used to type your program.

2) Assembler: An assembler is programs that translate assembly language program to the correct binary/hex code for each instruction i.e. machine code and generate the file called as Object file with extension .obj and list file with extension .lst extension. It is used to find syntax error in the program.

3) Compiler: Compiler is programs that translate C language program to the correct binary/hex code for each command i.e. machine code and generate the file called as Object file with extension .obj and list file with extension .lst extension. It is used to find syntax error in the program.

4) Linker: A linker is a program, which combines, if requested, more than one separately assembled object files into one executable program, such as two or more programs and also generate .abs file and initializes it with special instructions to facilitate its subsequent loading the execution. Some examples of linker are ASEM-51 BL51, Keil u Vision Debugger, LX 51 Enhanced Linker etc.

d) List software and hardware interrupts used in 8051 with their vector addresses and priorities. — **4M**

Ans:

Interrupt Source	Vector address	Interrupt priority
External Interrupt 0 –INT0	0003H	1
Timer 0 Interrupt	000BH	2
External Interrupt 1 –INT1	0013H	3
Timer 1 Interrupt	001BH	4
Serial Interrupt	0023H	5

2M-List, 1M - Vector , 1M- priority

Q. No.	Sub Q. N.	Answers	Marking Scheme
4		**Attempt any THREE of the following :**	**12- Total Marks**
	(a)	**Develop an 8051 based system for traffic light controlling .Draw interfacing diagram and write ALP for the same.**	**4M**

	Ans:	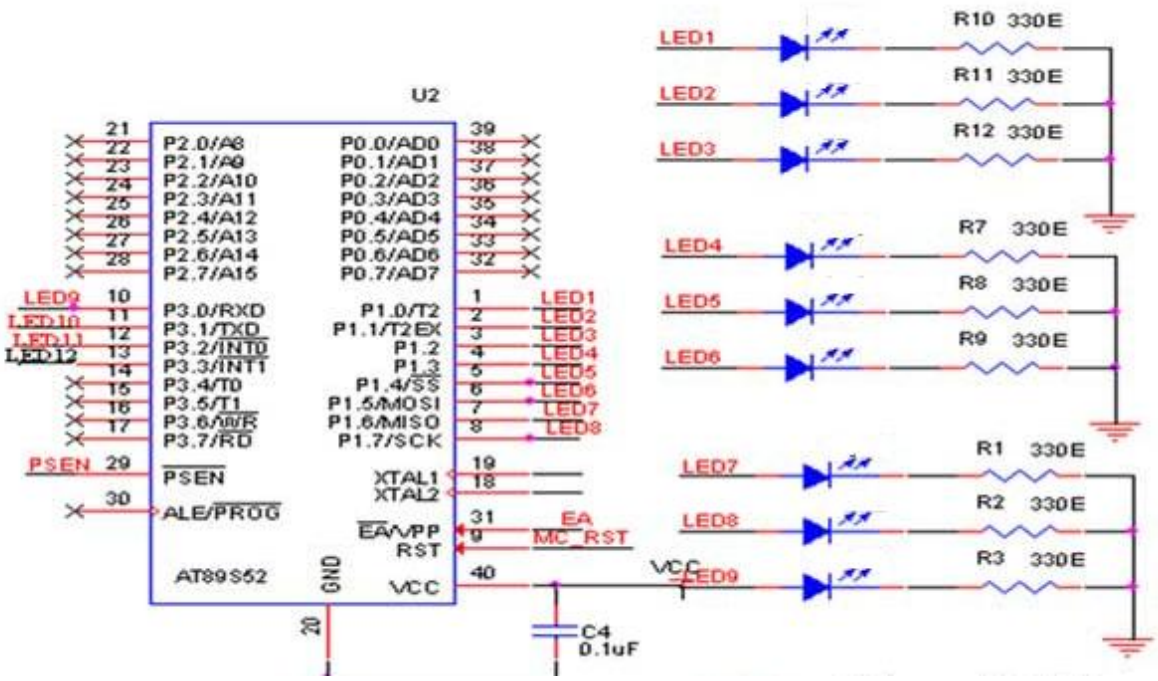 Diagram shows four way traffic light control. 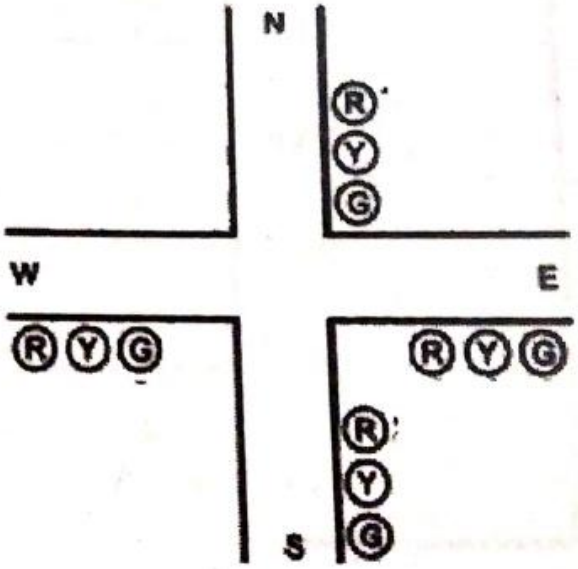	2M-DRAW, 2M-PROGRAM

LANE Direction	8051 LINES	TRAFFIC LIGHT
NORTH	P1.0(NR)	RED
	P1.1(NY)	YELLOW
	P1.2(NG)	GREEN
SOUTH	P1.3(SR)	RED
	P1.4(SY)	YELLOW
	P1.5(SG)	GREEN
EAST	P1.6(ER)	RED
	P1.7(EY)	YELLOW
	P3.0(EG)	GREEN
WEST	P3.1(WR)	RED
	P3.2(WY)	YELLOW
	P3.3(WG)	GREEN

Process:

1. **Allow traffic from W to E and E to W.**
2. **Yellow light ON.**
3. **Allow traffic from N to S and S to N**
4. **Yellow light ON.**
5. **Repeat Process**

Program:

```
NR EQU P1.0

NY EQU P1.1

NG EQU P1.2
```

		SR EQU P1.3
		SY EQU P1.4
		SG EQU P1.5
		
		ER EQU P1.6
		EY EQU P1.7
		EG EQU P3.0
		
		WR EQU P3.1
		WY EQU P3.2
		WG EQU P3.3
		
		MOV P1,#00H
		MOV P3,#00H
		
		AGAIN: SETB NR ;North Red ON
		SETB SR ; South Red ON
		SETB EG ;East Green ON
		SETB WG ; West Green ON
		ACALL DELAY
		CLR EG ;East Green OFF
		CLR WG ;West Green OFF
		SETB EY ; East Yellow ON
		SETB WY ; West Yellow ON
		ACALL Y_DELAY ; Small Delay for Yellow	

```
CLR EY          ; East Yellow OFF
CLR WY          ; West Yellow OFF
SETB ER         ; East Red ON
SETB WR         ;West Red ON
CLR SR          ; South Red OFF
CLR NR          ; North Red OFF
SETB NG         ; North Green ON
SETB SG         ; South Green ON
ACALL DELAY
CLR NG          ; North Green OFF
CLR SG          ; South Green OFF
SETB NY         ; North Yellow ON
SETB SY         ; South Yellow ON
ACALL Y_DELAY
CLR NY          ; North Yellow OFF
CLR SY          ; South Yellow OFF
CLR ER          ; East Red OFF
CLR WR          ; West Red OFF
AJMP AGAIN

DELAY: MOV R0,#0FFH
L:MOV R1,#0FFH
DJNZ  R1,$
DJNZ R0,L
RET
```

		Y_DELAY: MOV R2,#0FFH **DJNZ R2,$** **RET** **END**	
	(b)	**Compare Von-Neumana and Harvard Architecture (any four points)**	**4M**
	Ans:		**1M Each**

Sr. No	Harvard Architecture	Van Neumann's Architecture
1.	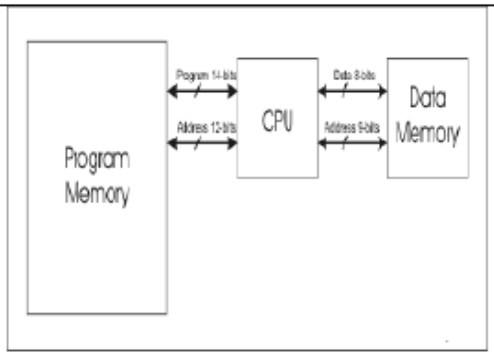	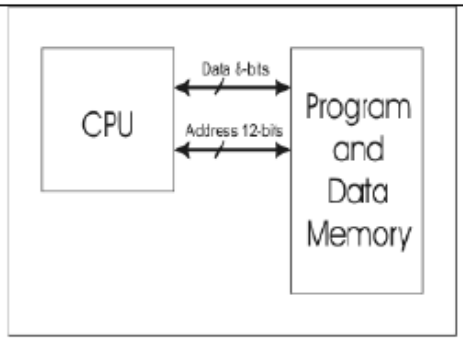
2.	The Harvard architecture uses physically separate memories for their instructions and data.	The Van Neumann's architecture uses single memory for their instructions and data.
3.	Requires separate & dedicated buses for memories for instructions and data	Requires single bus for instructions and data.
4.	Its design is complicated	Its design is simpler.
5.	Instructions and data can be fetched simultaneously as there is separate buses for instructions and data which increasing operation bandwidth.	Instructions and data have to be fetched in sequential order limiting the operation bandwidth.

(c) List different timer modes of 8051 microcontroller and describe mode 2 with neat sketch. **4M**

Ans: **1M- List, 1.5M- Diagram , 1.5M- describe**

M1	M0	MODE	DESCRIPTION
0	0	0	13-bit timer
0	1	1	16-bit timer
1	0	2	8-bit auto-reload
1	1	3	Split mode

		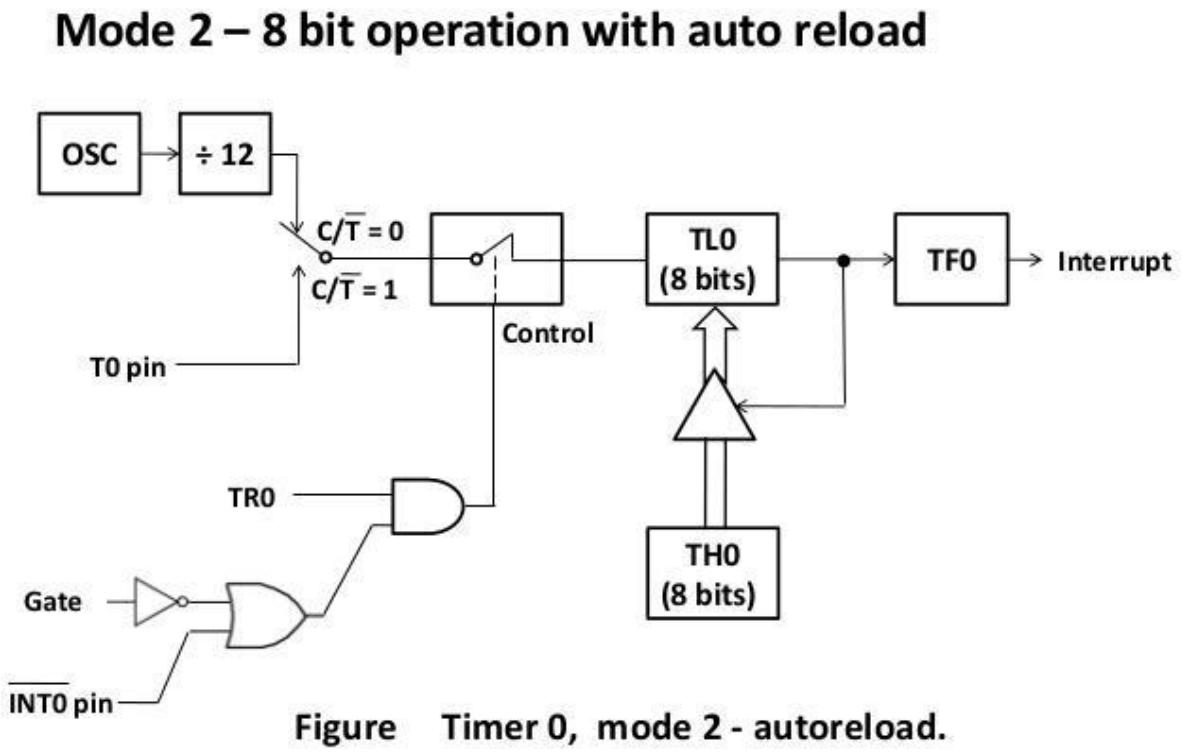 Figure Timer 0, mode 2 - autoreload. To start the timer in mode 2, C/T= 0 and TR0=1 and the other input of AND gate is also 1.In this mode only TLX is used as 8-bit counter. THX is used to hold the value which is loaded in TLX initially. Every time TLX overflows from FFH to 00H the timer flag is set and the value from THX is automatically reloaded in TLX register.	
	(d)	**Explain the interfacing diagram of DAC to 8051. Write an ALP to generate triangular waveform using DAC.**	**4M**
	Ans:	**(For any other relevant Program marks can be given)**	**2M diagram, 2M Program**

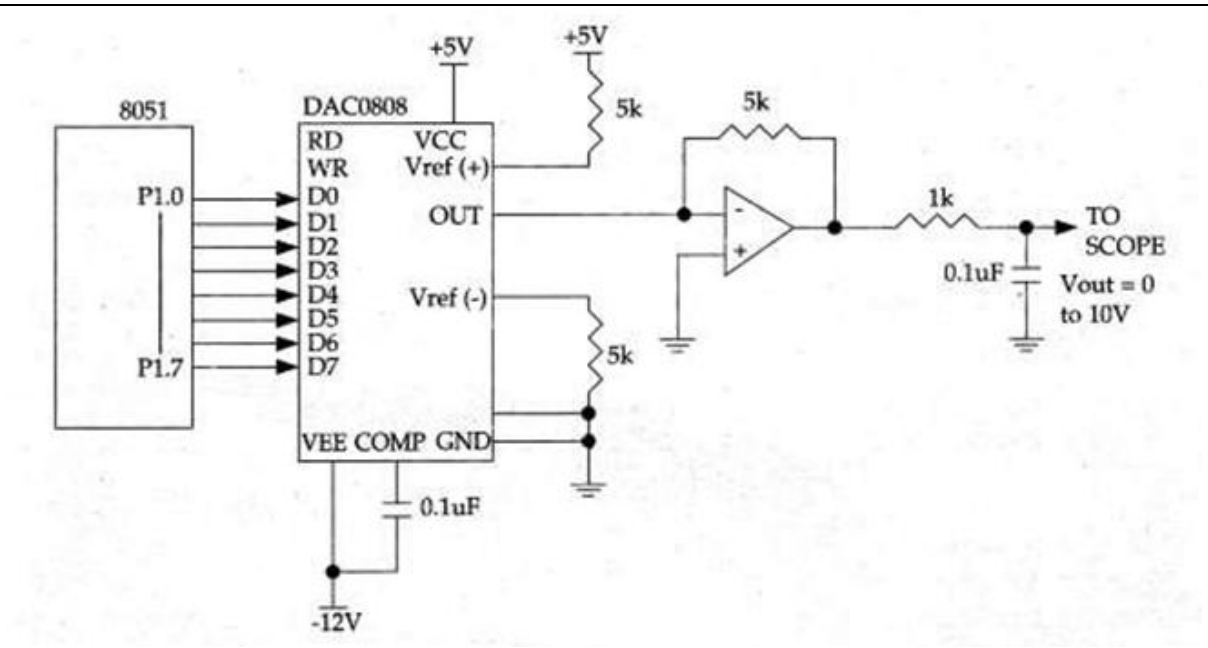

Program:

```
ORG 0000H
REPEAT: MOV A, #00H          ; Clear A
INCR: MOV P1, A              ; Send value to P1
INC A                        ; increment value
CJNE A, #0FFH, INCR          ;Compare with highest value
DECR: MOV P1, A
DEC A                        ; Decrement value
CJNE A,#00H, DECR            ;Compare with lowest value
SJMP REPEAT                  ; repeat
END
```

	(e)	**Develop an ALP to transmit message "MSBTE" serially at baud rate 4800 8bit data , 1 stop bit. Assume crystal frequency of 11.0592 MHz .**	**4M**
	Ans:	Org 0000h MOV TMOD, #20H ; timer 1, mode2	**3M program**

		MOV TH1,#-6 or MOV TH1,#0FAh ; 4800 baud rate
		MOV SCON, #50H ; 8-bit data,1 stop bit, REN enabled
		SETB TR1 ; Start timer 1
		AGAIN: MOV A, #"M" ; transfer "M"
		ACALL MESSAGE
		MOV A, #"S" ; transfer "S"
		ACALL MESSAGE
		MOV A, #"B" ; transfer "B"
		ACALL MESSAGE
		MOV A, #"T" ; transfer "T"
		ACALL MESSAGE
		MOV A, #"E" ; transfer "E"
		ACALL MESSAGE
		SJMP AGAIN
		
		MESSAGE: MOV SBUF, A
		JNB TI, $
		CLR TI
		RET
		END
			, 1M-Comments

Q. No.	Sub Q. N.	Answers	Marking Scheme
5.		**Attempt any TWO of the following:**	**12- Total Marks**
	a)	**Explain the various selection factors of microcontroller suitable for application.**	**6M**
	Ans:	The selection of microcontroller depends upon the type of application. The following factors must be considered while selecting the microcontroller. 1. Word length: The word length of microcontroller is either 8, 16 or 32 bit. As the word length increases, the cost, power dissipation and speed of the microcontroller increases. 2. Power dissipation: It depends upon various factors like clock frequency, speed,	**Any 6** **1 Mark—each factor**

		supply voltage, VLSI technology etc. For battery operated embedded systems, we must use low power microcontrollers. 3. Clock frequency: The speed of an embedded system depends upon the clock frequency. The clock frequency depends upon the application. 4. Instruction Set: On the basis of instructions microcontrollers are classified into two categories 1. CISC 2. RISC. CISC system improves software flexibility. Hence it is used in general purpose systems. RISC improves speed of the system for the particular applications. 5. Internal resources: The internal resources are ROM, RAM, EEPROM, FLASH ROM, UART, TIMER, watch dog timer, PWM, ADC, DAC, network interface, wireless interface etc. It depends upon the application for which microcontroller is going to be used. 6. I/O capabilities: The number of I/O ports, size and characteristics of each I/O port, speed of operation of the I/O port, serial port or parallel ports. These are the considerations needed to ascertain. 7.Memory: For mass production of microcontrollers ROM versions and for lesser production EPROM version or CPU version with external program memory is suitable	
	b)	**Develop a program to transfer block of 05 numbers. From memory location 50H to 60H.**	**6M**

	Ans:	**NOTE: Program may change. Please check the logic and understanding of students**
		
		ORG 0000H ; Program from 0000H
		CLR PSW.3 ; select bank 0
		CLR PSW.4 ;
		MOV R3, #05H ; Initialize Byte counter
		MOV R0, #50H ; Initialize memory pointer for source array
		MOVR1,#60H ; Initialize memory pointer for destination array
		; therefore R0 → Source pointer
		; R1 → destination pointer
		UP : MOV A, @R0 ; Read number from source array
			4 M— Correct Program ,2 M-comments

		MOV @R1, A ; Write number to destination array INC R0 ; Increment source memory pointer by 1 INC R1 ; Increment destination memory pointer by 1 DJNZ R3, UP ; Decrement byte counter by 1 ; Is it zero? No, jump to UP HERE : SJMP HERE END ; Stop	
	c)	**Sketch 8051 interfacing diagram to interface 4 LED's and 4 switches. Interface switches to port 0 and LED to port 1 upper nibble. Develop an ALP to read status of switches and operate LED's as per switch status.**	**6M**
	Ans:	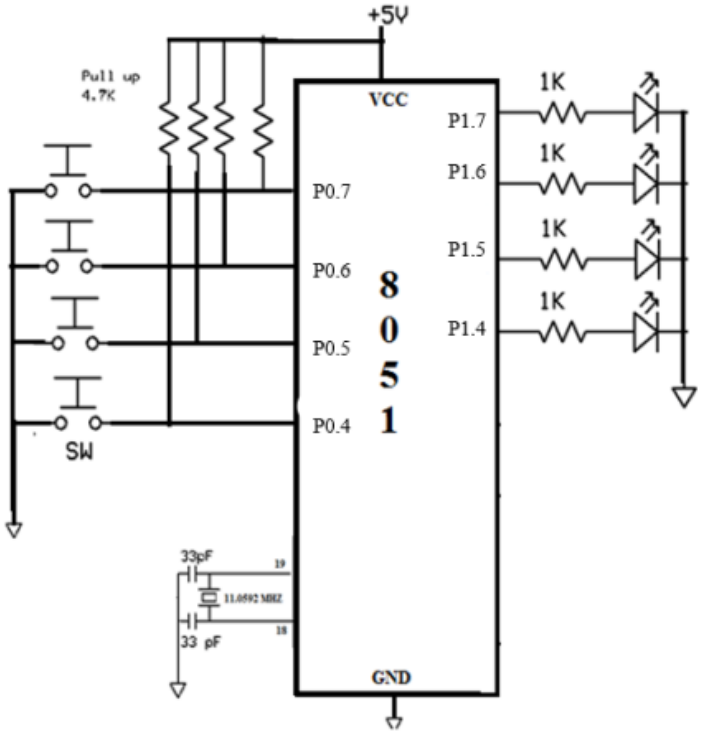 **NOTE: Program may change. Please check the logic and understanding of students**	**3 M - correct interfacing diagram, 3 M - correct program**

PROGRAM TO DISPLAY STATUS OF SWITCHES ON LED:

```
        ORG 0000H
         MOV P0, #0F0H            ; Make P0 as input
START:   MOV A, P0                ; Read status of the key
         CJNE A, #0F0H, CHECK1    ; Key pressed branch from Port 0
         SJMP START               ; Jump to start
CHECK1:  LCALL DELAY              ; Call Key debounce delay
         MOV A, P0                ; Read data from port 0
         CPL A                    ; Complement A
         MOV P1, A                ; Send data to LED
         SJMP START               ; Jump to start

DELAY:   MOV R1,#0FFH             ; Delay program
UP:      MOV R2, #0FFH;
HERE:    DJNZ R2, HERE
         DJNZ R1, UP
         RET
         END
```

Q. No.	Sub Q. N.	Answers	Marking Scheme
6.		**Attempt any TWO of the following :**	**12- Total**

			Marks
	a)	**Develop an ALP to read temperature from LM 35 sensor. Draw the interfacing diagram with 8051**	**6M**
	Ans:	NOTE: Program may change. Please check the logic and understanding of students 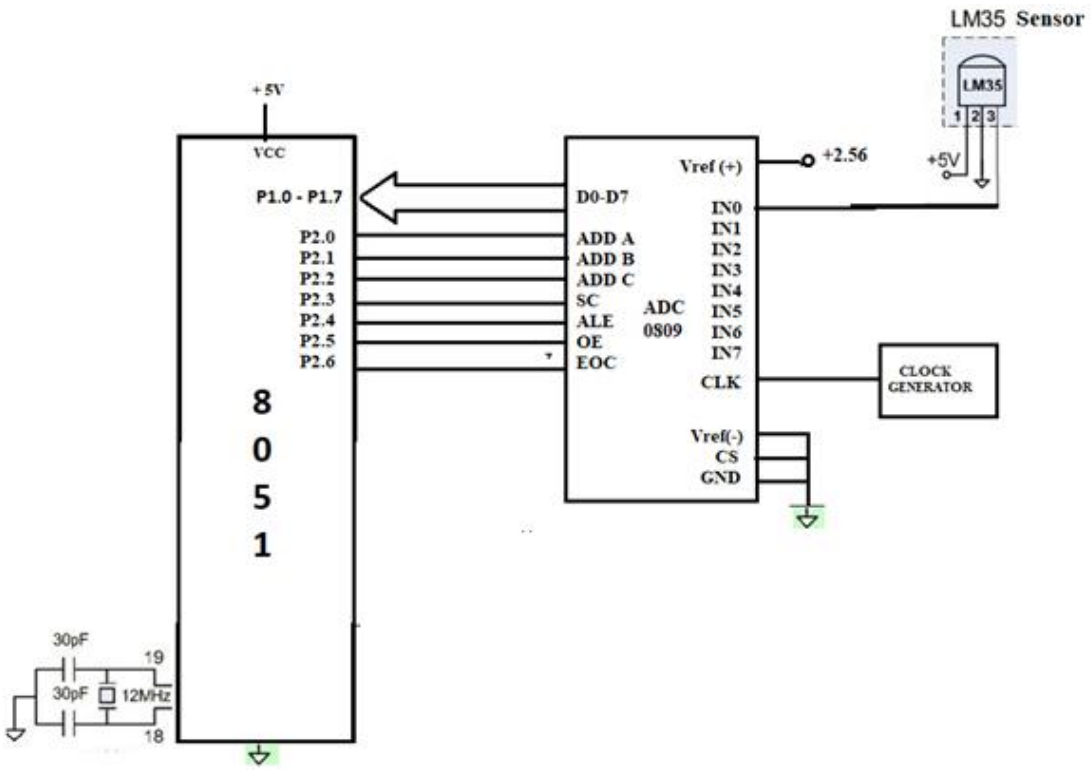 **Program:** ORG 0000H ADDR_A BIT P2.0 ADDR_B BIT P2.1 ADDR_C BIT P2.2 SC BIT P2.3 ALE BIT P2.4 OE BIT P2.5 EOC BIT P2.6	**3 M – Correct diagram, 3 M- Correct Program**

```
        MY_DATA EQU P1
        ORG 0000H
        MOV MY_DATA,#0FFH ; make P1 as input
        SETB EOC ; make EOC an input
        CLR ALE ; clear ALE
        CLR SC ; clear SC
        CLR OE ;clear OE
         CLR ADDR_C ; C=0
         CLR ADDR_B ; B=0
         CLR ADDR_A ; A=0(select channel 0)
         ACALL DELAY
         SETB ALE ;latch address
         ACALL DELAY
BACK:   SETB SC ;start conversion
         ACALL DELAY
         CLR ALE
         CLR SC
HERE:   JB EOC,HERE        ; wait
HERE1: JNB EOC,HERE1
         SETB OE
         ACALL DELAY
         MOV A, MY_DATA
         MOV P1, A
          CLR OE
         SJMP BACK

DELAY: MOV R3,#25 ;Delay Subroutine
     L3: MOV R4,#100
     L2: MOV R5,#100
     L1: DJNZ R5,L1
          DJNZ R4,L2
          DJNZ R3,L3
           RET
           END
```

	b)	**Develop a program to toggle the LED's after every 500m sec connected to P1.0 and P1.1 after receiving the external interrupt on INT0.**	**6M**

	Ans:	**NOTE: Program may change. Please check the logic and understanding of students**
		Solution :
		Crystal freq=11.0592MHz
		Timer frequency=11.0592MHz/12
		Time=12/11.0592MHz=1.085µs
		For delay of 50 ms,
		50ms/1.085µs=46082
		Therefore, count to be loaded in TH1 and TL1 can be calculated as
		65536 - 46082 =19454D=4BFEH
		
		Note: If crystal frequency is taken as 12MHz then count to be loaded in TH1 and TL1 will be 3CB0h.
		
		Program:
		ORG 00 H
		LJMP MAIN
		ORG 0003 H
		MOV TMOD, #10H ; Timer1, mode 1
		HERE : MOV R0, #0AH ; Counter for 500ms (50*10)delay
		BACK : MOV TL1, # B0H ; load count value in TL1
		MOV TH1, #3CH ; load count value in TH1
		
		SETB TR1 ; start Timer 1
		AGAIN : JNB TF1, AGAIN ; stay until timer rolls over
		CLR TR1 ; stop timer
		CLR TF1 ; clear timer flag
		DJNZ R0, BACK ; if R0 is not equal to 0, reload timer
		CPL P1.0 ; Toggle P1.0
			4 M-correct program ,1 M-delay calculation,1M-comments

		CPL P1.1 ; Toggle P1.1 RETI ; repeat MAIN : MOV IE, #81H ; Enable the external interrupt 0 SETB P3.2 ; P3.2 as input pin HERE : SJMP HERE END	
	c)	**Explain the following instructions.** **SWAP A** **ADD C** **MUL AB** **CJNE A, add, radd** **MOV A, R_0** **MOVX A, @ A + DPTR.**	**6M**
	Ans:	**SWAP A** Description: This instruction exchanges bits 0-3 of the Accumulator with bits 4-7 of the Accumulator. This instruction is identical to executing "RR A" or "RL A four times Example: MOV A, #59H ; A= 59H SWAP A ; A= 95H **ADD C** Description: This instruction is used to perform addition of two eight-bit numbers along with carry. The result is stored in accumulator which is the default destination. Example: ADDC A, R0 : Add contents of accumulator, R0 and carry .The result is stored in accumulator. **MUL AB** Description: the multiplicand and the multiplier must be in A and B registers. After multiplication if the result is 8 bit it will be in the accumulator and if the result is larger than 8 bit ,lower byte of result will be in accumulator and higher byte will be in register B. Example :MOV A,#10H MOV B,#02 H MUL AB	**1 M – each instruction.**

		After execution A=20H,B=0 H **CJNE A, add, radd** Description: Compare the contents of the accumulator with the 8 bit data in memory address mentioned in the instruction and if they are not equal then jump to the relative address mentioned in the instruction. Example: CJNE A, 04H, UP: Compare the contents of the accumulator with the contents of 04H memory and if they are not equal then jump to the line of instruction where UP label is mention **MOV A,R_0** Description: this instruction copies the contents of source register R0 into accumulator. The register R0 remains unaffected. Example: Before Execution A=43 H, R0=32 H After execution A=32 H, R0-32H **MOVX A, @ A + DPTR. (Consider it as MOVC A,@A+DPTR)** Description: Copy the contents of code memory pointed by the sum of Accumulator and DPTR to the Accumulator MOVC is a move instruction, which moves data from the code memory space. The address operand in this example is formed by adding the content of the DPTR register to the accumulator value. Here the DPTR value is referred to as the base address and the accumulator value is referred to as the index address. **(NOTE : If student has attempted to solve considering as above or attempted to solve as given in question paper, give appropriate marks)**	

22426

11920

3 Hours / 70 Marks Seat No. | | | | | | | | |

Instructions – (1) All Questions are *Compulsory.*

(2) Illustrate your answers with neat sketches wherever necessary.

(3) Figures to the right indicate full marks.

(4) Assume suitable data, if necessary.

(5) Use of Non-programmable Electronic Pocket Calculator is permissible.

(6) Mobile Phone, Pager and any other Electronic Communication devices are not permissible in Examination Hall.

Marks

1. Attempt any FIVE of the following: **10**

a) Compare address bus and data bus used in 8051.

b) Calculate the number of address lines required to access 16 Kb ROM.

c) State features of ADC 0808.

d) List specifications of 8051 microcontroller.

e) List any two instructions which makes accumulator zero individually.

f) Compare Data memory and program memory.

g) List SFR in 8051. (any four)

Marks

2. Attempt any THREE of the following: 12

a) Compare any three derivatives of 8051 microcontroller on the basis of RAM, ROM, Timer and Interrupts.

b) Draw and explain the interfacing of DAC to 8051.

c) Describe 8051 microcontroller as boolean processor.

d) Explain function of following pins of 8051

(i) pin no 31

(ii) pin 29

(iii) pin 21-28

3. Attempt any THREE of the following. 12

a) Develope Assembly Language program (ALP) to find the largest number in a block of 10 numbers stored at location 40 H onwards in internal RAM.

b) Sketch the internal memory organization in 8051

c) Explain processes of interrupt enabling and disabling in 8051.

d) Explain following instructions of 8051.

(i) ADDC

(ii) L CALL

4. Attempt any THREE of the following. 12

a) Draw the format of TCON register of 8051 and describe the function of each bit of it.

b) Describe serial communication in 8051. Explain the use of SCON register.

c) Draw interfacing of 16 × 2 LCD with 8051 and state the function of EN and RS pin of LCD.

d) Explain the use of following assembler directives.

i) EQU

ii) ORG

e) State the alternate pin functions of port 3 of 8051.

Marks

5. Attempt any TWO of the following. 12

a) Explain with sketch the interfacing of 4 × 4 matrix keypad with 8051 microcontroller.

b) Differentiate between

(i) Harvard and Von-neuman architecture

(ii) Microprocessor and Microcontroller

c) Develop an ALP to generate square wave of 3 KHz using 8051 microcontroller on port pin P2.3. (Assume X_{tal} $freq^n$ = 12 MHz)

6. Attempt any TWO of the following. 12

a) Draw interfacing of stepper motor with 8051 and write an ALP to rotate it in clockwise direction.

b) Describe with sketches the procedure to troubleshoot the traffic light controller.

c) Draw and explain Internal Port structure of Port 0 and Port 1 of 8051 microcontroller.

WINTER – 19EXAMINATION

Subject Name: Microcontroller & Application **Model Answer** Subject Code: 22426

Important Instructions to examiners:

1) The answers should be examined by key words and not as word-to-word as given in themodel answer scheme.
2) The model answer and the answer written by candidate may vary but the examiner may tryto assess the understanding level of the candidate.
3) The language errors such as grammatical, spelling errors should not be given moreImportance (Not applicable for subject English and Communication Skills.
4) While assessing figures, examiner may give credit for principal components indicated in thefigure. The figures drawn by candidate and model answer may vary. The examiner may give credit for anyequivalent figure drawn.
5) Credits may be given step wise for numerical problems. In some cases, the assumed constantvalues may vary and there may be some difference in the candidate's answers and model answer.
6) In case of some questions credit may be given by judgement on part of examiner of relevant answer based on candidate's understanding.
7) For programming language papers, credit may be given to any other program based on equivalent concept.

Q. No.	Sub Q. N.	Answer	Marking Scheme
Q.1		**Attempt any FIVE of the following:**	**10M**
	a)	**Compare address bus and data bus used in 8051.**	**2M**
	Ans:		**1M each (Any 2 points)**

Sr. No.	Address Bus	Data Bus
1	A bus that is used to specify a physical address in memory	A bus that is used to transmit data among components
2	Unidirectional	Bidirectional
3	Helps to transfer memory address of data and I/O	Helps to send and receive data
4	16 bit address bus in 8051	8 bit data bus in 8051

	b)	**Calculate the number of address lines required to access 16 kB ROM.**	**2M**
	Ans:	14 address lines required to access 16 KB of ROM as 2^{14} = 16KB	**2M**
	c)	**State features of ADC 0808.**	**2M**
	Ans:	1. Easy to interface with all Microprocessors or works Stand alone. 2. Eight channel 8-bit **ADC** module. 3. Can measure up to 8 Analog values. 4. On chip Clock not available, external Oscillator is needed (Clock). 5. Digital output various from 0 to 255, operating power is 15mW, conversion time 100us.	**1M each (Any 2 points)**
	d)	**List specifications of 8051 microcontroller.**	**2M**
	Ans:	1) 8- bit data bus and 8- bit ALU. 2) 16- bit address bus – can access maximum 64KB of RAM and ROM. 3) On- chip RAM -128 bytes (Data Memory) 4) On- chip ROM – 4 KB (Program Memory)	**1M each (Any 2 points)**

		5) Four 8-bit bi- directional input/output ports Four 8-bit bi- directional input/ output ports. 6) Programmable serial ports i.e. One UART (serial port) 7) Two 16- bit timers- Timer 0& Timer 1 8) Works on crystal frequency of 11.0592 MHz 9) Has power down and idle mode in microcontroller when no operation is performed. 10) Six interrupts are available.	
	e)	**List any two instructions which makes accumulator zero individually.**	**2M**
	Ans:	MOV A,#00H CLR A	**1M each**
	f)	**Compare data memory and program memory.**	**2M**

Ans: **1M each**

Sr.No.	Program Memory	Data Memory
1	It is used for storing the hexadecimal codes of the program to be executed i.e. instructions.	It is used for storing temporary variable data and intermediate results.
2	Program Memory of 8051 is 4kB	Data Memory of 8051 is 128 bytes

	g)	**List SFR in 8051. (any four)**	**2M**
	Ans:	• ACC and B registers – 8 bit each • DPTR : [DPH:DPL] – 16 bit combined • PC : Program Counter – 16 bits • Stack pointer SP – 8 bit • PSW : Program Status Word • Port Latches • Serial data buffer, serial control • Timer Registers (TCON,TMOD,TL0/1,TH0/1) • Power control • Interrupt Enable, Interrupt Priority	**½ M each**

Q.2		**Attempt any THREE of the following:**	**12- Total Marks**
	a)	**Compare any three derivatives of 8051 microcontroller on the basis of RAM,ROM,Timer and Interrupts.**	**4M**
	Ans:		**1M each (Any 4 Points)**

Features	8051	8052	89c52	8031	8751	89v51 RD2
RAM	128	256	256	128	128	1k
ROM	4K (mask	8K (EPROM)	8K (Flash)	0	4K (UV-EPROM)	64KB (FLASH)

	ROM)						
TIMER	2	3	3	2	2	3	
INTERRUPTS	6	8	8	6	6	8	

b) Draw and explain the interfacing of DAC to 8051. **4M**

Ans: Diagram: **2M**

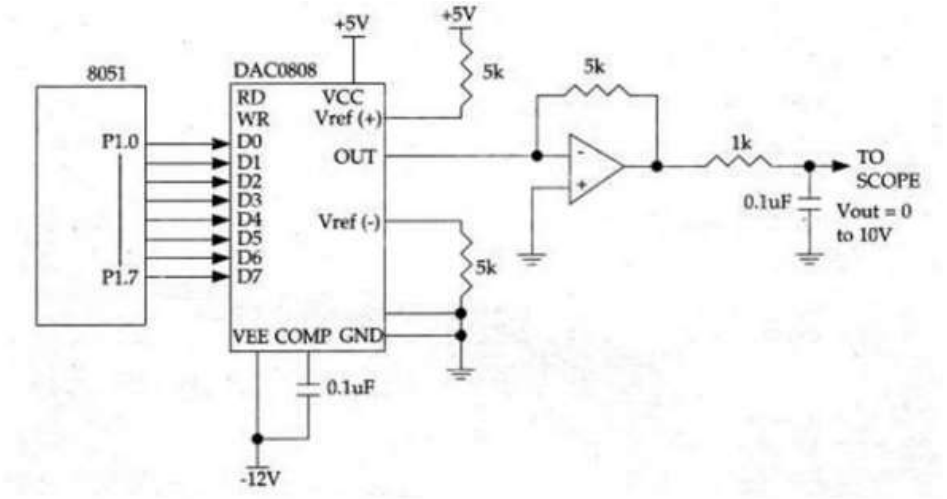

- Microcontroller generates output which is in digital form but many controlling system requires analog signal as they don't accept digital data thus making it necessary to use DAC which converts digital data into equivalent analog voltage. **2M Explanation**
- In the figure shown, we use 8-bit DAC 0808. This IC converts 8 bit digital data into equivalent analog current. Hence we require an I to V converter to convert this current into equivalent voltage.

c) Describe 8051 microcontroller as boolean processor. **4M**

Ans: **4M**

- 8051 processor is a CPU that can perform some operation on a data and gives the output.
- The 8051 processor contains a complete Boolean processor for single-bit operations.
- The internal RAM contains 128 addressable bits, and the SFR space supports up to 128 other addressable bits.
- All port lines are bit-addressable, and each can be treated as a separate single-bit port.
- The instructions that access these bits are not only conditional branches but also a complete set of move, set, clear, complement, OR, and AND instructions.
- The 8051 instruction set is optimized for the one bit operations. The Boolean processor provides direct support for bit manipulation and testing of individual bit allows the use of single bit variable to perform logical operations therefore 8051 can be used to solve Boolean expression. Bits may be set or cleared in a single instruction.
- Eg: CLR C means clear the carry bit
  SETB 20h means set the memory bit with bit address 20h.

d) Explain function of following pins of 8051
(i) Pin 31
(ii) Pin 29
(iii) Pin 21-28 **4M**

Ans: i) **Pin 31-EA :** It is and active low I/P to 8051 microcontroller. When (**EA**)= 0, then 8051 microcontroller access from external program memory (ROM) only. When (**EA**) = 1, **1M- EA**

		then it access internal and external program memories (ROMS). **ii) Pin 29- PSEN :** This is an output pin. **PSEN** stands for "program store enable." It is active low O/P signal. It is used to enable external program memory (ROM). When [PSEN(bar)]= 0, then external program memory becomes enabled and micro controller read content of external memory location. Therefore it is connected to (OE) of external ROM. **iii) Pin 21-28: $A_8 – A_{15}$:** These pins are known as Port 2. It serves as I/O port. Each pin is bidirectional Input /Output with internal pull – up resistors. Besides the Input /Output, when external memory is interfaced, PORT 2 pins act as the higher-order address bus. (A8-A15)	**1M-PSEN** **2M-Pin 21-28** **1M Port 2 & 1M A8 - A15**
Q.3		**Attempt any THREE of the following:**	**12- Total Marks**
	a)	**Develop Assembly Language program (ALP) to find the largest number in a block of 10 numbers stored at location 40H onwards in internal RAM.**	**4M**

	Ans:	**(NOTE: Marks to be given for any other correct logic used by students.)**
		ORG 0000H
		MOV R1, #0AH ; Initialize Byte Counter
		MOV R0, #40H ; Initialize source pointer R0 to 40H
		DEC R1 ; decrement counter by one
		MOV 60H, @R0 ;Read First Byte
		UP: INC R0 ; Increment the contents of R0
		MOV A, @R0 ; Read second number
		CJNE A, 60H, DN ;compare the first two numbers, if not equal go to DN
		AJMP LARGE ;else go to LARGE
		DN: JC LARGE ;check carry
		MOV 60H, A ;Store largest number to 60H
		LARGE: DJNZ R1, UP ;decrement the counter by one, if count ≠ 0, then go to UP
		END
		Largest No. is saved in memory 60H. Assume any location to store the result.
		OR
		MOV R1, #0AH ; initialize the counter
		MOV R0, #40H ; initialize the memory pointer
		DEC R1 ; decrement counter by one
		MOV A,@R0 ; load number in accumulator
		MOV B, A ; move that number to register B
		UP: INC R0 ; increment the memory pointer
		MOV A,@R0 ; read the next number in A
		CJNE A, B, DOWN ; compare the first two numbers, if not equal go to DOWN
		AJMP NEXT ; else go to NEXT
		DOWN: JC NEXT ; if number in A is greater then go to NEXT
		MOV B, A ; else move the number in register B
		NEXT: DJNZ R1, UP ; decrement the counter by one, if count ≠ 0, then go to UP
		INC R0 ; increment the memory pointer
		MOV A,B
		MOV 50H, A ; store result at memory location 50H(Assume any location)
		HERE: SJMP HERE
			4M for correct program

	b)	**Sketch the internal memory organization in 8051.**	**4M**
	Ans:	**Daigram:** 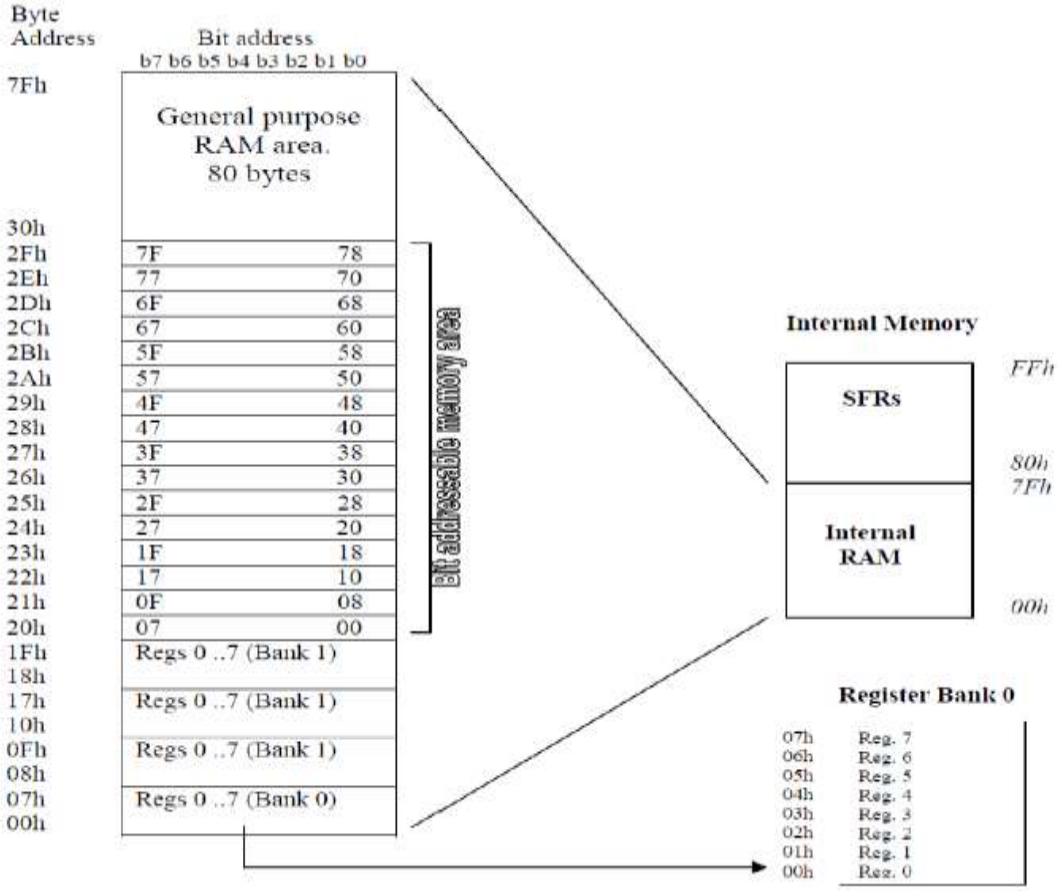	**4M for neat Sketch with label**
	c)	**Explain processes of interrupt enabling and disabling in 8051.**	**4M**
	Ans:	Interrupts are the events that temporarily suspend the main program, pass the control to the external sources and execute their task. It then passes the control to the main program where it had left off.8051 has 5 interrupt signals, i.e. INT0, TF0, INT1, TF1, RI/TI. Each interrupt can be enabled or disabled by setting bits of the IE register and the whole interrupt system can be disabled by clearing the EA bit of the same register. **IE (Interrupt Enable) Register:** This register is responsible for enabling and disabling the interrupt. EA bit is set to 1 for enabling interrupts and set to 0 for disabling the interrupts. Its bit sequence and their meanings are shown in the following figure. EA | _ | _ | ES | ET1 | EX1 | ET0 | EX0	**2M format** **2M function of each**

EA	IE.7	It disables all interrupts. When EA = 0 no interrupt will be acknowledged and EA = 1 enables the interrupt individually.	
-	IE.6	Reserved for future use.	
-	IE.5	Reserved for future use.	
ES	IE.4	Enables/disables serial port interrupt.	
ET1	IE.3	Enables/disables timer1 overflow interrupt.	
EX1	IE.2	Enables/disables external interrupt1.	
ET0	IE.1	Enables/disables timer0 overflow interrupt.	
EX0	IE.0	Enables/disables external interrupt0.	

bit

d) **Explain following instructions of 8051.**
(i) ADDC
(ii) L CALL — **4M**

Ans: **(i)** **ADDC**: The **ADDC** instruction adds a byte value and the value of the carry flag to the accumulator. The results of the addition are stored back in the accumulator. Several of the flag registers are affected. — **2M each instruction**

ADDC
Function: Add with Carry
Syntax: ADDC A, source byte
Flags affected: OV,AC,CY
Description: ADDC simultaneously adds the byte variable indicated, the carry flag and the Accumulator contents, leaving the result in the Accumulator (A = A + byte +CY). The carry and auxiliary-carry or bit flags are set, respectively. If CY = 1 prior to this instruction, CY is also added to A.
Addressing modes supported for ADDC instruction :

- Immediate: ADDC A,#data
- Register: ADDC A, Rn
- Direct: ADDC A, address
- Register Indirect: ADDC A, @Ri

(ii) LCALL
Function: Long call, Transfers control to a subroutine
Syntax: LCALL 16 bit addr
Flags affected : None
No. of bytes used: 3 byte(1 byte is opcode and other two bytes are the 16 bit address of the target subroutine)
Description: This instruction is used to transfers control to a subroutine To reach the target address in the 64 Kbytes maximum ROM space of the 8051, LCALL instruction is used. For calling a subroutine, the PC register (which has the address of the instruction after the LCALL) is pushed onto the stack, and the stack pointer (SP) is incremented by 2. Then the program counter is loaded with the new address and control is transferred to the subroutine.

Q.4		**Attempt any THREE of the following :**	**12 Marks**
	a)	**Draw the format of TCON register of 8051 and describe the function of each bit of it.**	**4M**
	Ans:	**TCON: TIMER/COUNTER CONTROL REGISTER.BIT ADDRESSABLE** **TF1 | TR1 | TF0 | TR0 | IE1 | IT1 | IE0 | IT0** TF1 TCON. 7 Timer 1 overflows flag. Set by hardware when the Timer/Counter 1 Overflows. Cleared by hardware as processor vectors to the interrupt Service routine. TR1 TCON. 6 Timer 1 run control bit. Set/cleared by software to turn Timer/Counter1 ON/OFF. TF0 TCON. 5 Timer 0 overflow flag. Set by hardware when the Timer/Counter 0 Overflows. Cleared by hardware as processor vectors to the service routine. TR0 TCON. 4 Timer 0 run control bit. Set/cleared by software to turn Timer/Counter 0 ON/OFF. IE1 TCON. 3 External Interrupt 1 edge flag. Set by hardware when External Interrupt edge is detected. Cleared by hardware when interrupt is processed. IT1 TCON. 2 Interrupt 1 type control bit. Set/cleared by software to specify falling edge/low level triggered External Interrupt. IE0 TCON. 1 External Interrupt 0 edge flag. Set by hardware when External Interrupt edge detected. Cleared by hardware when interrupt is processed. IT0 TCON. 0 Interrupt 0 type control bit. Set/cleared by software to Specify falling edge/low level triggered External Interrupt	**2M format** **2M Function of each bit**
	b)	**Describe serial communication in 8051. Explain the use of SCON register.**	**4M**
	Ans:	8051 micro controller communicate with another peripheral device through RXD and TXD pin of port3.controller have four mode of serial communication. **1. Serial Data Mode-0 (Baud Rate Fixed)** In this mode, the serial port works like a shift register and the data transmission works synchronously with a clock frequency of fosc /12. Serial data is received and transmitted through RXD. 8 bits are transmitted/ received at a time. Pin TXD outputs the shift clock pulses of frequency fosc /12, which is connected to the external circuitry for synchronization. The shift frequency or baud rate is always 1/12 of the oscillator frequency. **2. Serial Data Mode-1 (standard UART mode)(baud rate is variable)** In mode-1, the serial port functions as a standard Universal Asynchronous Receiver Transmitter (UART) mode. 10 bits are transmitted through TXD or received through RXD. The 10 bits consist of one start bit (which is usually '0'), 8 data bits (LSB is sent first/received first), and a stop bit (which is usually '1'). Once received, the stop bit goes into RB8 in the special function register SCON. The **baud rate is variable** **3. Serial Data Mode-2 Multiprocessor (baud rate is fixed)** In this mode 11 bits are transmitted through TXD or received through RXD. The various bits are as follows: a start bit (usually '0'), 8 data bits (LSB first), a programmable 9 th (TB8 or RB8)bit and a stop bit (usually '1'). While transmitting, the 9 th data bit (TB8 in SCON) can be assigned the value '0' or '1'. For example, if the information of parity is to be transmitted, the parity bit (P) in PSW could be moved into TB8.On reception of the data, the 9 th bit goes into RB8 in 'SCON',	**2M mode description in short** **(½ mark for each mode)** **& 2M format with function**

while the stop bit is ignored. The baud rate is programmable to either 1/32 or 1/64 of the oscillator frequency.

f baud = (2 SMOD /64) fosc

4. Serial Data Mode-3 - Multi processor mode(Variable baud rate)

In this mode 11 bits are transmitted through TXD or received through RXD.The various bits are: a start bit (usually '0'), 8 data bits (LSB first), a programmable 9 th bit and a stop bit (usually '1'). Mode-3 is same as mode-2, except the fact that the baud rate in mode-3 is variable (i.e., just as in mode-1).

$f_{baud} = (2^{SMOD} /32) * (f_{osc}/ 12 (256-TH1))$

SM0	SM1	SM2	REN	TB8	RB8	TI	RI

SM0 SCON.7 Serial port mode specifier

SM1 SCON.6 Serial port mode specifier.

SM0 SM1

0 0 Serial Mode 0

0 1 Serial Mode 1, 8-bit data, 1 stop bit, 1 start bit

1 0 Serial Mode 2

1 1 Serial Mode 3

SM2 SCON.5 Used for multiprocessor communication

REN SCON.4 Set/ cleared by software to enable/ disable reception.

TB8 SCON.3 – the 9th bit that will be transmitted in mode 2/3 set/clear by software.

RB8 SCON.2– in mode 2/3 it is the 9th bit that was received .

TI SCON.1 Transmit interrupt flag. Set by hardware at the beginning of the stop Bit in mode 1.

RI SCON.0 Receive interrupt flag. Set by hardware halfway through the stop bit time in mode 1.

c) **Draw interfacing of 16 × 2 LCD with 8051 and state the function of EN and RS of LCD** **4M**

Ans: **Diagram:** **2M for diagram**

2Marks for

		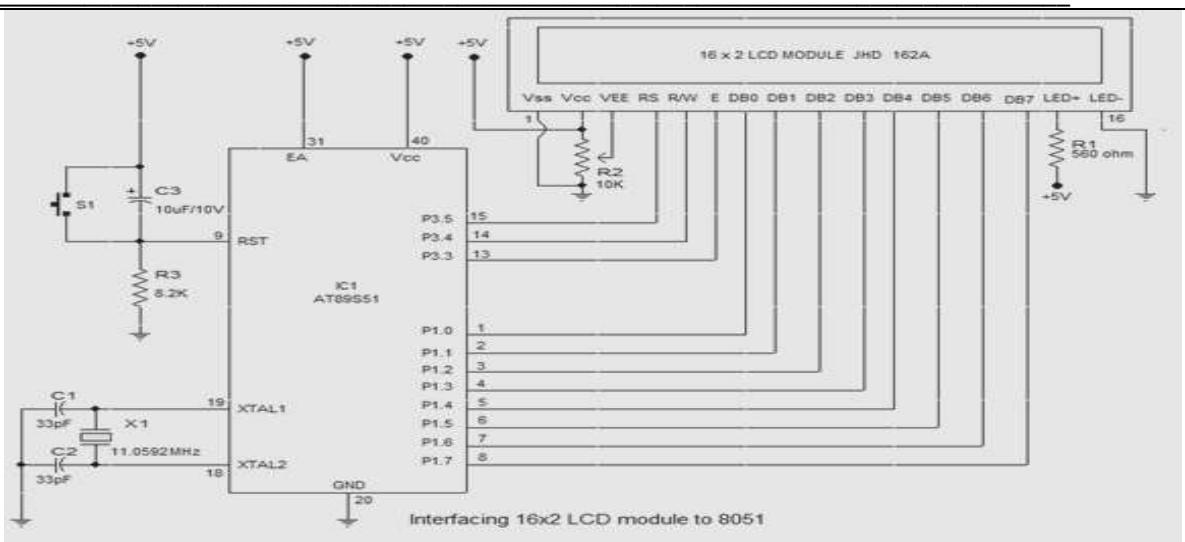 **RS:** RS is the register select pin. We need to set it to 1, if we are sending some data to be displayed on LCD. And we will set it to 0 if we are sending some command instructions during the initializing sequence like clear the screen etc. **EN:** The enable pin is used by the LCD to latch information presented to its data pins. When data is supplied to the data pins, a high-to-low pulse must be applied to this pin in order for the LCD to latch in the data present at the data pins. This pulse must be a minimum of **450ns** wide.	**function of two pins(1Mark each pin function)**
	d)	**Explain the use of following assembler directives.** **(i) EQU** **(ii) ORG**	**4M**
	Ans:	**(i) EQU**: Equate It is used to define constant without occupying a memory location. Syntax: Label EQU Numeric value By means of this directive, a numeric value is replaced by a symbol. For e.g. MAXIMUM EQU 99 After this directive every appearance of the label MAXIMUM in the program, the assembler will interpret as number 99 (MAXIMUM=99). **(ii) ORG:-**ORG stands for Origin Syntax: ORG Address The ORG directive is used to indicate the beginning of the address.The *origin directive* tells the assembler where to load instructions and data into memory. It changes the program counter to the value specified by the expression in the operand field. The number thatcomes after ORG can be either in hex or in decimal. If the number is notfollowed by H, it is decimal and the assembler will convert it to hex.	**2 Marks for each directive**
	e)	**State the alternate pin functions of port 3 of 8051.**	**4M**

Ans:

Pin	Name	Alternate Function
P3.0	RXD	Serial input line
P3.1	**TXD**	Serial output line
P3.2	$\overline{INT0}$	External interrupt 0
P3.3	$\overline{INT1}$	External interrupt 1
P3.4	**T0**	Timer0 external input
P3.5	**T1**	Timer1 external input
P3.6	$\overline{WR}$	External data memory write strobe
P3.7	$\overline{RD}$	External data memory read strobe

4 Marks for 8 pins(½ mark for each pin function)

Q.5 **Attempt any TWO of the following** **12 Total Marks**

(a) **Explain with sketch the interfacing of 4 ×4 matrix keypad with 8051 microcontroller.** **6M**

Ans:

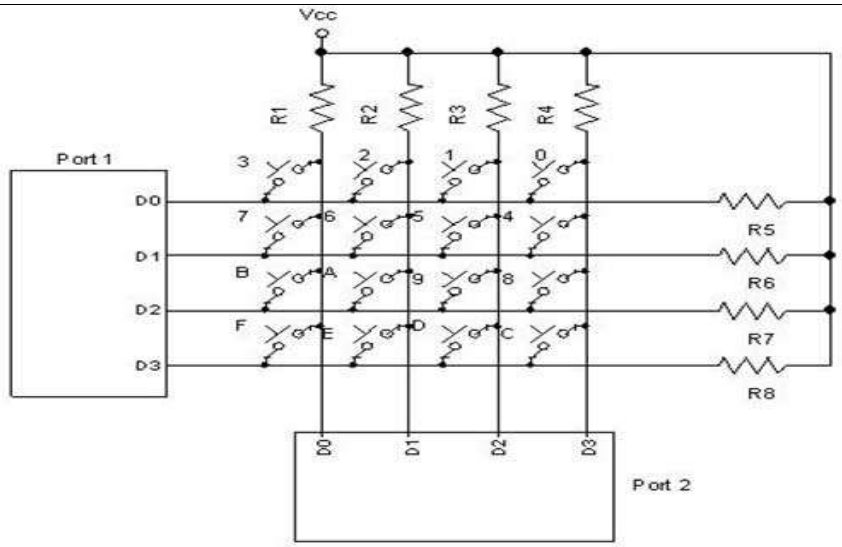

sketch -3M

Interfacing keypad

Fig. shows how to interface the **4 X 4 matrix keypad** to two ports in **microcontroller**. The rows are connected to an output port and the columns are connected to an input port.

To detect a pressed key, the **microcontroller** grounds all rows by providing 0 to the output latch, and then it reads the columns. If the data read from the columns is D3-D0=1111, no key has been pressed and the process continues until a key press is detected. However, if one of the

Explanation – 3M

column bits has a zero, this means that a key press has occurred. For example, if D3-D0=1101, this means that a key in the D1 column has been pressed.

After a key press is detected, the **microcontroller** will go through the process of identifying the key. Starting with the top row, the **microcontroller** grounds it by providing a low to row D0 only; then it reads the columns.

If the data read is all 1s, no key in that row is activated and the process is moved to the next row. It grounds the next row, reads the columns, and checks for any zero. This process continues until the row is identified. After identification of the row in which the key has been pressed, the next task is to find out which column the pressed key belongs to.

(b) **Differentiate between**
(i) Harvard and Von-neuman architecture
(ii) Microprocessor and Microcontroller — **6M**

Ans:

i) Harvard Architecture and Von-neuman architecture — **Von Nuemann Harvard 3 M (any three points)**

Sr.No	Von Neumann architecture	Harvard architecture
1	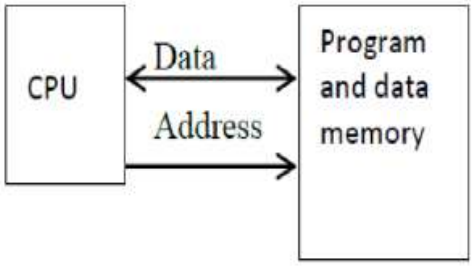	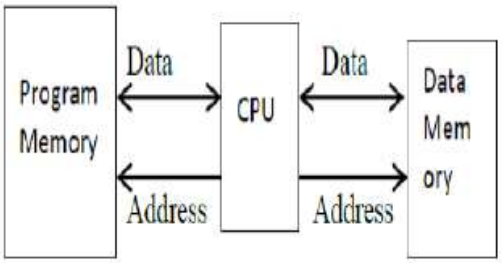
2	The Van Neumann architecture uses single memory for their instructions and data.	The Harvard architecture uses physically separate memories for their instructions and data.
3	Requires single bus for instructions and data	Requires separate & dedicated buses for memories for instructions and data.
4	Its design is simpler	Its design is complicated
5	Instructions and data have to be fetched in sequential order limiting the operation bandwidth.	Instructions and data can be fetched simultaneously as there is separate buses for instruction and data which increasing operation bandwidth.
6	Program segments & memory blocks for data & stacks have separate sets of addresses.	Vectors & pointers, variables program segments & memory blocks for data & stacks have different addresses in the program.

ii) Microprocessor and Microcontroller — **Micro proces**

Sr. No	Parameter	Microprocessor	Microcontroller
1.	No. of instructions used	Many instructions to read/ write data to/ from external memory.	Few instruction to read/ write data to/ from external memory
2.	Memory	Do not have inbuilt RAM or ROM.	Inbuilt RAM /or ROM
3.	Registers	Microprocessor contains general purpose registers, Stack pointer register, Program counter register	Microcontroller contains general purpose registers, Stack pointer register, Program counter register additional to that it contains Special Function Registers (SFRs) for Timer , Interrupt and serial communication etc.
4.	Timer	Do not have inbuilt Timer.	Inbuilt Timer
5.	I/O ports	I/O ports are not available requires extra device like 8155 or 8255.	I/O ports are available
6.	Serial port	Do not have inbuilt serial port, requires extra devices like 8250 or 8251.	Inbuilt serial port
7.	Multifunction pins	Less Multifunction pins on IC.	Many multifunction pins on the IC
8.	Boolean Operation	Boolean operation is not possible directly.	Boolean Operation i.e. operation on individual bit is possible directly
9.	Applications	General purpose, Computers and Personal Uses.	Single purpose(dedicated application), Automobile companies, embedded systems, remote control devices.

sor , Micro controller – 3M (any three points)

(c) **Develop an ALP to generate square wave of 3 KHz using 8051 microcontroller on port pin P2.3 (Assume $X_{tal}freq^n$=12 MHz)** **6M**

Ans:

Crystal frequency= 12 MHz

I/P clock = (12*10^6)/12= 1 MHz

T_{in} = 1μ sec

For 3 kHz square wave

F_{out} = 3 KHz T_{out} = 1/ (3X 10^3) = 0.3msec =333 μ sec

So T_{ON} = T_{OFF} = 333/2 = 166.5 μ sec

N = T_{ON} / T_{in} = 166.5 μ sec /1 μ sec = 166.5 167

65535 – 167+1 = $(65369)_{10}$ = $(FB71)_{16}$

Program:-

MOV TMOD, # 01H ; Set timer 0 in Mode 1, i.e., 16 bit timer

Count calculation – 2M, Correct program – 4M

		L2: MOV TL0, # 71 H ; Load TL register with LSB of count MOV TH0, # 0FB H ; load TH register with MSB of count SETB TR0 ; start timer 0 L1: JNB TF0, L1 ; poll till timer roll over CLR TR0 ; stop timer 0 CPL P2.3 ; complement port 2.3 line to get high or low CLR TF0 ; clear timer flag 0 SJMP L2 ; re-load timer with count as mode 1 is not auto reload	
Q.6		**Attempt any TWO of the following:**	**12Total Marks**
	(a)	**Draw interfacing of stepper motor with 8051 and write an ALP to rotate it in clockwise direction.**	**6M**
	Ans:	**Diagram:**	**3M**

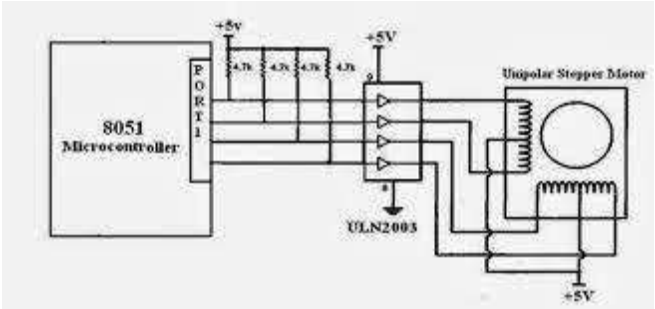

Step no	Winding A	Winding B	Winding C	Winding D	Clockwise
1	1	0	0	1	↓
2	1	1	0	0	
3	0	1	1	0	
4	0	0	1	1	

Program-

		<pre>MOV A,#66H ;load step sequence
		BACK: MOV P1,A ;issue sequence to motor
		RR A ;rotate right clockwise
		ACALL DELAY ;wait
		SJMP BACK ;keep going
		
		...
		DELAY
		MOV R2,#100
		H1: MOV R3,#255
		H2: DJNZ R3,H2
		DJNZ R2,H1
		RET</pre>
		(Other programs with similar logic can be given marks)
			3M

	(b)	**Describe with sketches the procedure to troubleshoot the traffic light controller.**	**6M**
	Ans:	**Considerations of Traffic Signal** 1) Traffic light may have sensors integrated to provide real time traffic information 2) Based on the traffic information provided by the sensor, the duration of the green/Red LED light for each direction may vary so that the traffic for both the directions are roughly balanced. Time left for the green light should be displayed 3) When the traffic light for one signal is green, then the traffic for the other directions should be red (with duration displayed in red) 4) The red light will be switched to yellow when the timer value is 5 sec before switching to red. 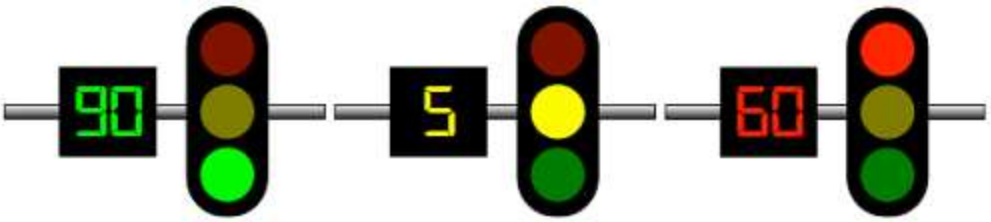 5) Violations happen when user expectancy is not met. A user like pedestrian does not expect to stand for more than a minute or two at a signal, when this user expectancy is not met, the pedestrian tries to venture out and violate the signal 6) The smooth movement of conflicting vehicles is determined by the availability of gaps in traffic. This is true for both pedestrians and vehicular traffic. Understanding of gaps is important for justifying the type of traffic control device, including a traffic signal. **Points to consider for determining signal timings** 1) The signal operational parameters are reviewed and updated (if needed) on a regular basis to maximize the ability of the traffic control signal to satisfy current traffic demands	**Any other correct troubl e shooti ng proce dure may be given marks**

2) Geometry of the intersection is the next step in the signal timing process. Determining the lane use (which traffic mode), dedicated vs. shared lane, type of roads interacting (arterial with arterial etc.), type of road infrastructure (ramps, one way streets, etc.) will impact the timing.
3) Basic signal timing parameters comes next. Pedestrian walk times, flashing don't walk, yellow time, all red clearance interval, detector gap times all need to calculated or established.
4) Identify bottlenecks, review conditions, conduct warrant analysis and use engineering judgment in determining traffic signal installation
5) Determine AM and PM peak hour traffic volumes.
6) Condition diagram which includes roadway geometrics, parking, driveways, sidewalks, signing, pavement markings, development of intersection quadrants, and any other features pertinent to the study peak hour delay study
7) A conflict analysis
8) Capacity analysis of the intersection for current and future years using growth

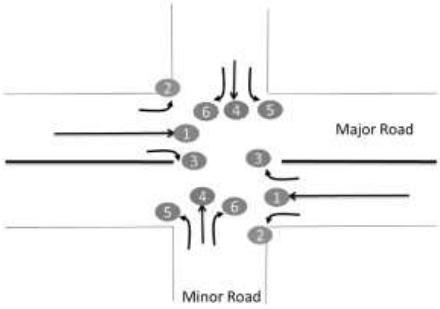

	(c)	**Draw and explain Internal port structure of Port 0 and Port 1 of 8051 microcontroller.**	**6M**

Ans:

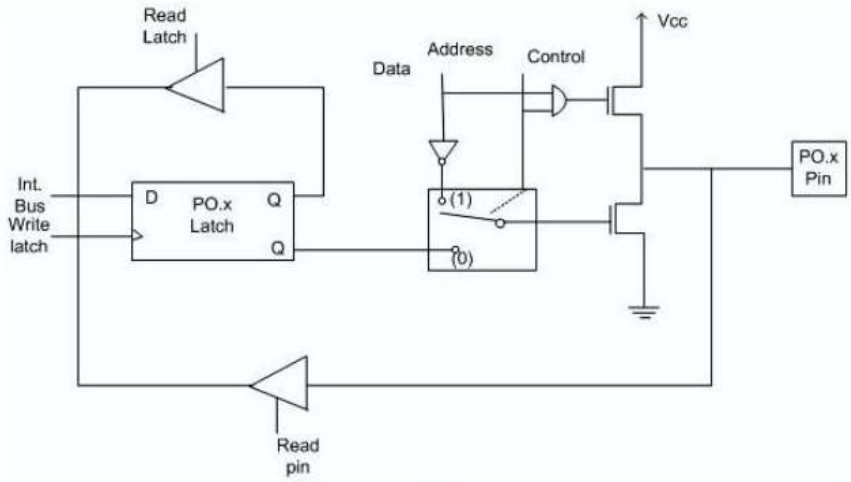

Port-0 Structure

Port-0 can be configured as a normal bidirectional I/O port or it can be used for address/data interfacing for accessing external memory. When control is '1', the port is used for address/data interfacing. When the control is '0', the port can be used as a normal bidirectional I/O port.

Port 0 – 3M

Let us assume that control is '0'. When the port is used as an input port, '1' is written to the latch. In this situation both the output MOSFETs are 'off'. Hence the output pin floats. This high impedance pin can be pulled up or low by an external source. When the port is used as an output port, a '1' written to the latch again turns 'off' both the output MOSFETs and causes the output pin to float. An external pull-up is required to output a '1'. But when '0' is written to the latch, the pin is pulled down by the lower MOSFET. Hence the output becomes zero.

Port 1 – 3M

When the control is '1', address/data bus controls the output driver MOSFETs. If the address/data bus (internal) is '0', the upper MOSFET is 'off' and the lower MOSFET is 'on'. The output becomes '0'. If the address/data bus is '1', the upper transistor is 'on' and the lower transistor is 'off'. Hence the output is '1'. Hence for normal address/data interfacing (for external memory access) no pull-up resistors are required.

Port-0 latch is written to with 1's when used for external memory access.

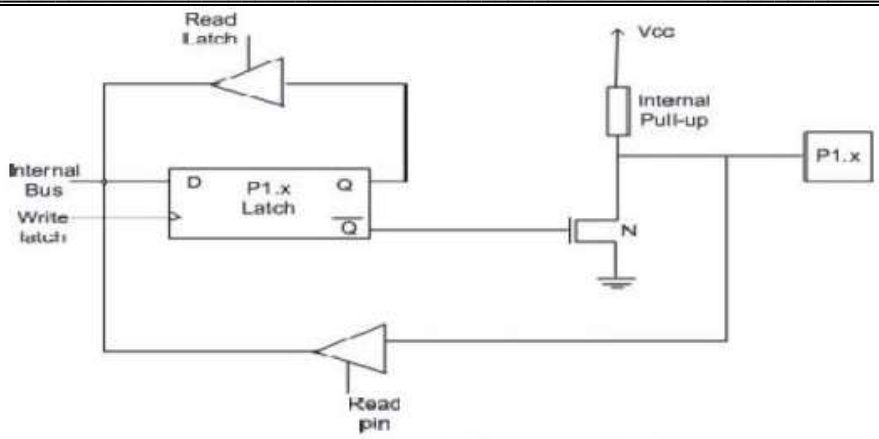

Port 1 Structure

Port-1 does not have any alternate function i.e. it is dedicated solely for I/O interfacing. When used as output port, the pin is pulled up or down through internal pull-up. To use port-1 as input port, '1' has to be written to the latch. In this input mode when '1' is written to the pin by the external device then it read fine. But when '0' is written to the pin by the external device then the external source must sink current due to internal pull-up. If the external device is not able to sink the current the pin voltage may rise, leading to a possible wrong reading.